HiFi ENGINE®

For more Hi-Fi manuals and set-up information
please visit www.hifiengine.com

YAMAHA Hi-Fi STEREO

SERVICE MANUAL

MODEL **CR-1000**

YAMAHA

www.hifiengine.com

CONTENTS

CIRCUIT DESCRIPTION 1
SPECIFICATIONS 5
EXTERNAL VIEW
FRONT PANEL 6
REAR PANEL (U.S. & CANADIAN MODELS) 6
REAR PANEL (EUROPEAN MODEL 6
INTERNAL VIEW
TOP VIEW 8
BOTTOM VIEW 9
PARTIAL DISASSEMBLY 10
DIAL MECHANISM 15
MEASUREMENT AND ADJUSTMENT
TUNER SECTION 16
AUDIO SECTION
EQ AMP CIRCUIT BOARD ADJUSTMENT 20
MAIN AMP CIRCUIT BOARD ADJUSTMENT 21
PRINTED CIRCUIT BOARD & SPECIAL REPLACEMENT PARTS LIST
TUNER CIRCUIT BOARD 22
EQUALIZER AMP CIRCUIT BOARD 23
FUNCTION CIRCUIT BOARD 23
TAPE MONITOR SWITCH CIRCUIT BOARD 23
MODE SWITCH CIRCUIT BOARD 23
TONE CONTROL AMP CIRCUIT BOARD 24
TONE CONTROL SWITCH CIRCUIT BOARD 24
TONE CONTROL VOLUME CIRCUIT BOARD 24
FILTER AMP CIRCUIT BOARD 25
LOUDNESS CIRCUIT BOARD 25
FILTER SWITCH CIRCUIT BOARD 25
MIC AMP CIRCUIT BOARD 25
MIC VOLUME CIRCUIT BOARD 26
MAIN AMP CIRCUIT BOARD 26
LIGHT EMITTING DIODE CIRCUIT BOARD 26
POWER CIRCUIT BOARD 27
REAR PANEL CIRCUIT BOARD 27
BLOCK DIAGRAM 28
OVERALL SCHEMATIC DIAGRAM 29
PARTIAL CHANGES MADE ACCORDING TO DESTINATION 32

CIRCUIT DESCRIPTION

- **AUTO-TOUCH AFC OFF CIRCUIT**

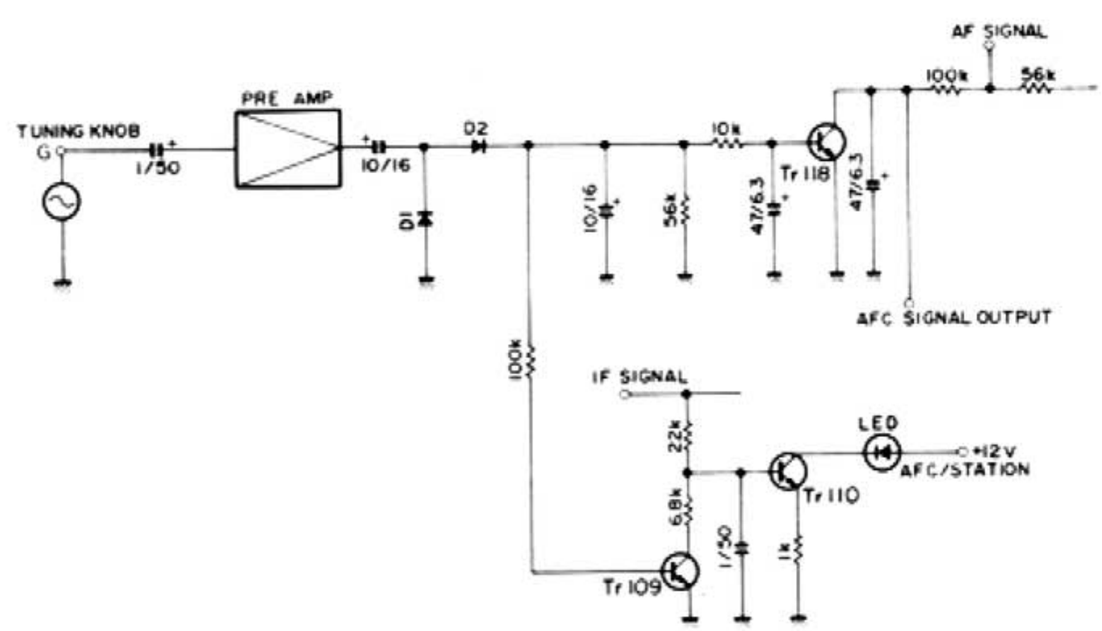

The human body's electric current (G) is detected by the tuning knob and amplified by the pre-amplifier, which then feeds it to D1 and D2.
This current is then supplied to the base of the Tr118, switching it and the AFC signal on, while the AFC circuit goes off.
When the station is tuned in and the tuning knob released, the current going to the base of the Tr118 goes off and the AFC circuit switches on for steady FM listening.
At the same time, the LED illuminated by the IF signal goes off to signal that the AFC circuit is off. This happens because D1 and D2 (mentioned above) feed current to the base of Tr109, lowering the Tr109 C-E impedance and thus reducing the Tr110 base collector current.

• MULTIPLEX DEMODULATOR WITH TRANSISTOR SWITCHING CIRCUIT EMPLAYING NEGATIVE FEEDBACK

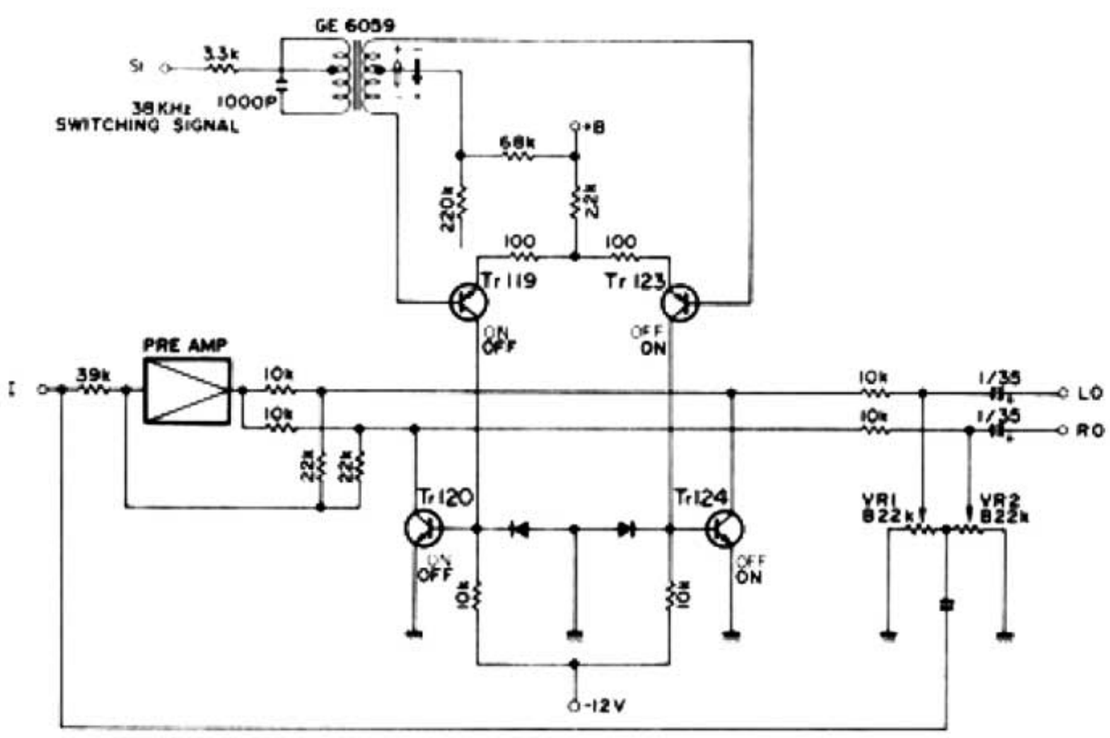

The composite signal entering through terminal I_1 is devided into L and R stereo signals through the on/off operation of Tr119 and Tr123, which are switched by the 38kHz switching signal.
These in tune switch Tr120 and Tr124 on and off to the divided signal.
The stereo signal entering via terminal I_1 is separated into L and R.
At this time, crosstalk elements are removed from the L and R signals by VR1 and VR2 and negative feedback is fed to terminal I_1.
Thus the circuit assures excellent separation and ultra-low distortions.

• TRANSIENT NOISE CANCELLATION CIRCUIT

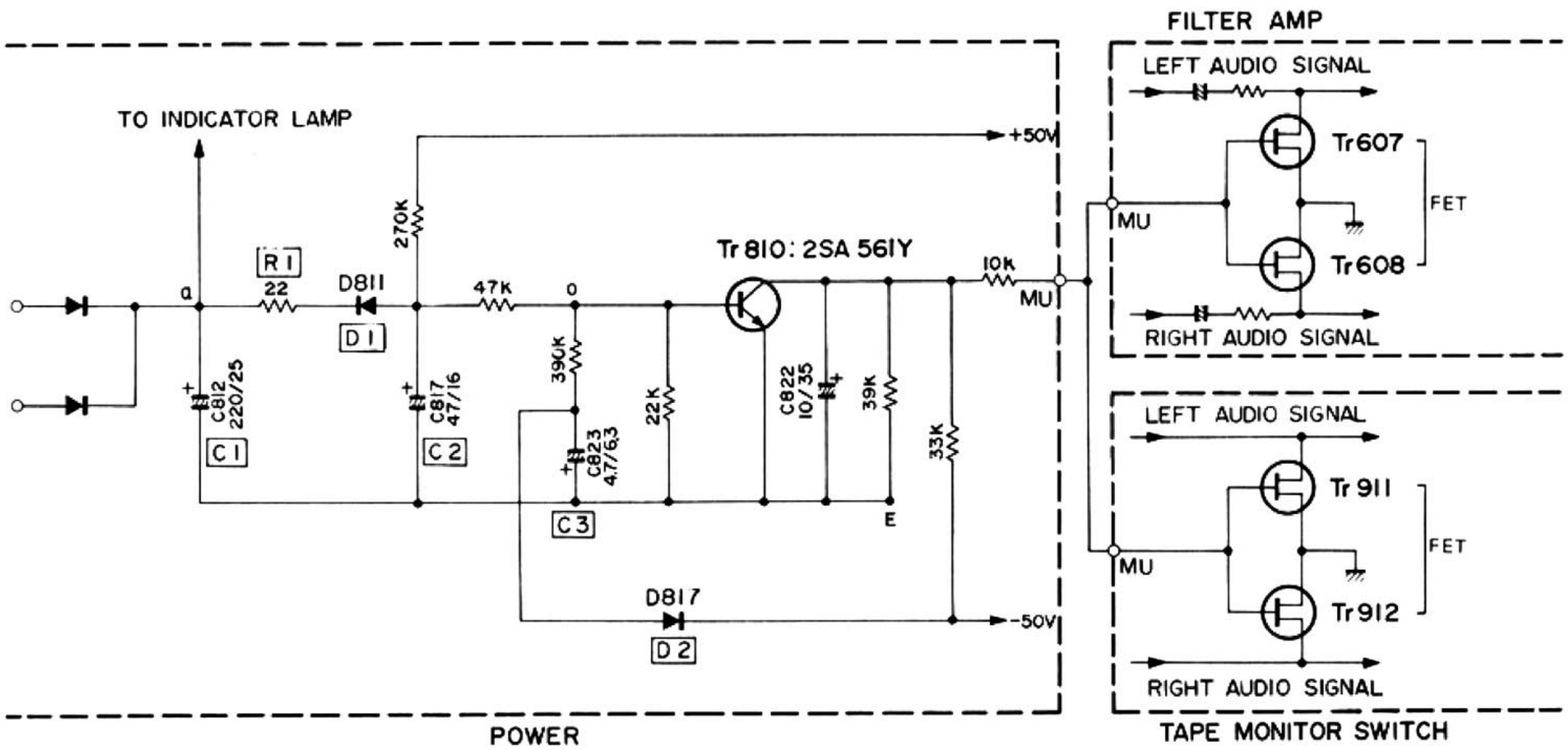

1. When the Power switch is off FETs are on, so the signal is grounded.
2. When the Power switch is on −50V current immediately flows to C3, but it takes some time for the 0 point potential to reach C2.
   Thus for a short time after the Power switch is turned on Tr810 is on, but FETs is also on, thus cutting initial switching noise.
3. During listening Tr810 has zero potential and is thus off due to the bias.
   For this reason potential is fed to MU (i.e., the gate of FETs), FETs goes off and the signal is passed.
4. When the Power switch is turned off the potential for the indicator lamp passes to point O, creating E potential there.
   In this case the load at C2 discharges through R1 and D1, the base of Tr810 receives current from C3 and is switched on by the load. FETs also goes on and the signal is grounded, thus eliminating noise when the set is switched off.

• MUTING CIRCUIT

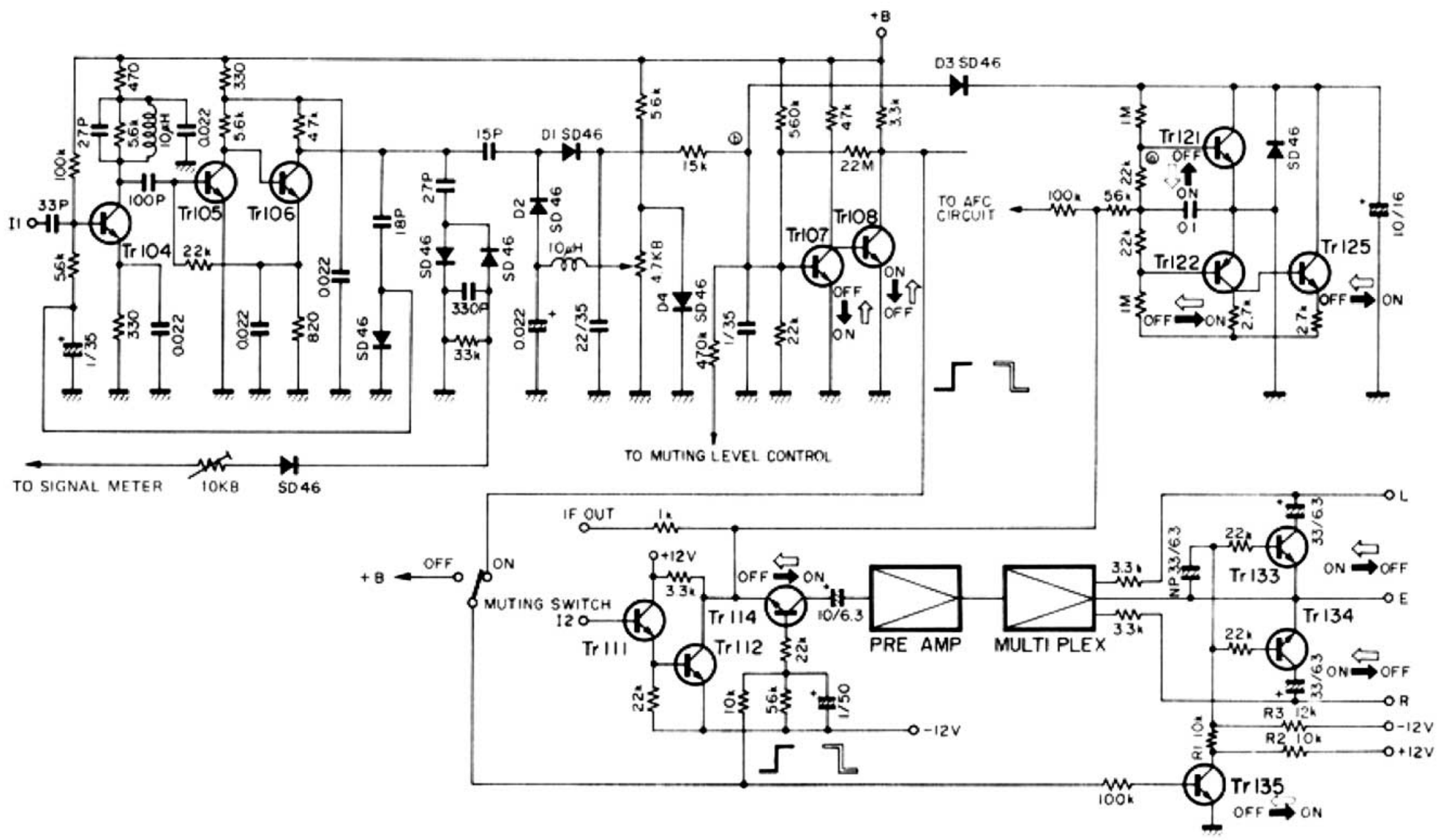

1. When Signal is Received
   The IF signal received via I_1 is amplified by Tr 104 – Tr 106. This signal is rectified by D1 and D2, becoming positive DC potential before being fed to the base of Tr 107. This switches Tr 107 on and Tr 108 off, so that the Tr 108 collector switches to positive potential. This raises the Tr 114 base potential, switching Tr 114 on, and the FM detection signal entering via I_2 is passed to the pre-amp. At the same time, Tr 135 base potential is raised, switching Tr 135 on. In order to create E potential in Tr 135 collector –12V is fed to the bases of Tr 133 and Tr 134, switching them off. In this way output signal is created at the L and R terminals.
2. When No Signal is Received
   In this condition, since no IF signal is entering via I_1, Tr 107 is off and Tr 108 is on. This causes the Tr 108 potential to equal E potential more or less. Tr 114 is off. At the same time Tr 135 is off, and because of the connection with R1, R2 and R3 positive potential is fed to the bases of Tr 133 and Tr 134. Tr-133 and Tr 134 are switched on, and a complete muting action is achieved thanks to Tr 114, Tr 133 and Tr 134.
3. Signal Received, But Tuning Not Centered
   In the best signal detection conditions (center of S curve) the detected output signal does not include DC components. However, if the tuning is off this point even slightly, the signal will include such DC components (+ or –). Using these DC components it is possible to determine whether the receiving conditions are good or bad. The CR-1000 muting circuit utilizes this phenomenon. The AC component is achieved using a 0.1μF capacitor taking the output of Tr 111 and Tr 112 and amplifying the detection signal, feeding only the DC component to point (a). If the +DC component generates Tr 122 goes on; if the –DC component generates, TR 122 goes on and thus switches on Tr 125. That is to say, if the signal fed to point (a) is different than the E potential, point (b) is grounded; thus it receives no signal. In this way all noise which occurs during tuning is canceled.

• PROTECTION CIRCUITS

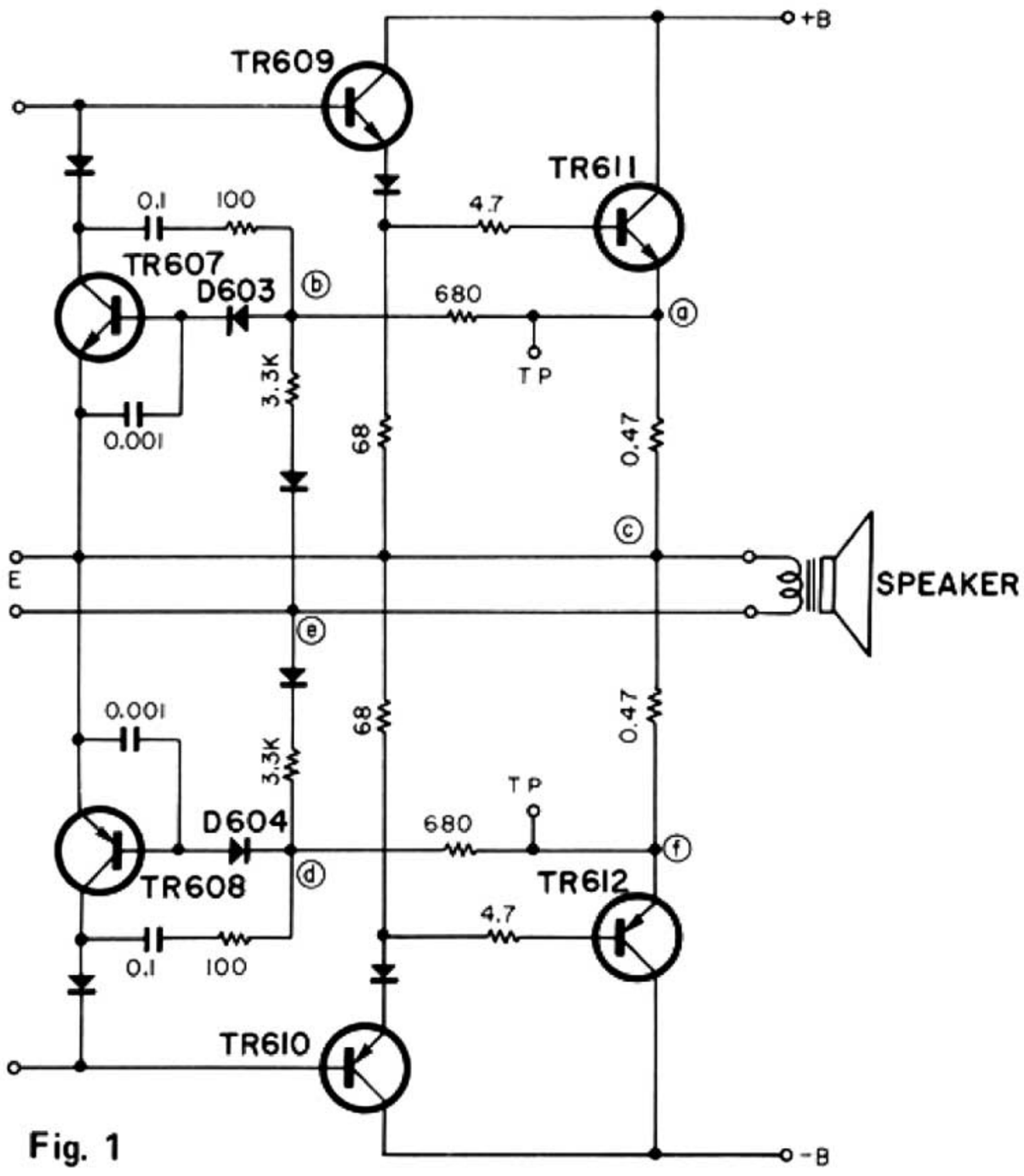

Fig. 1

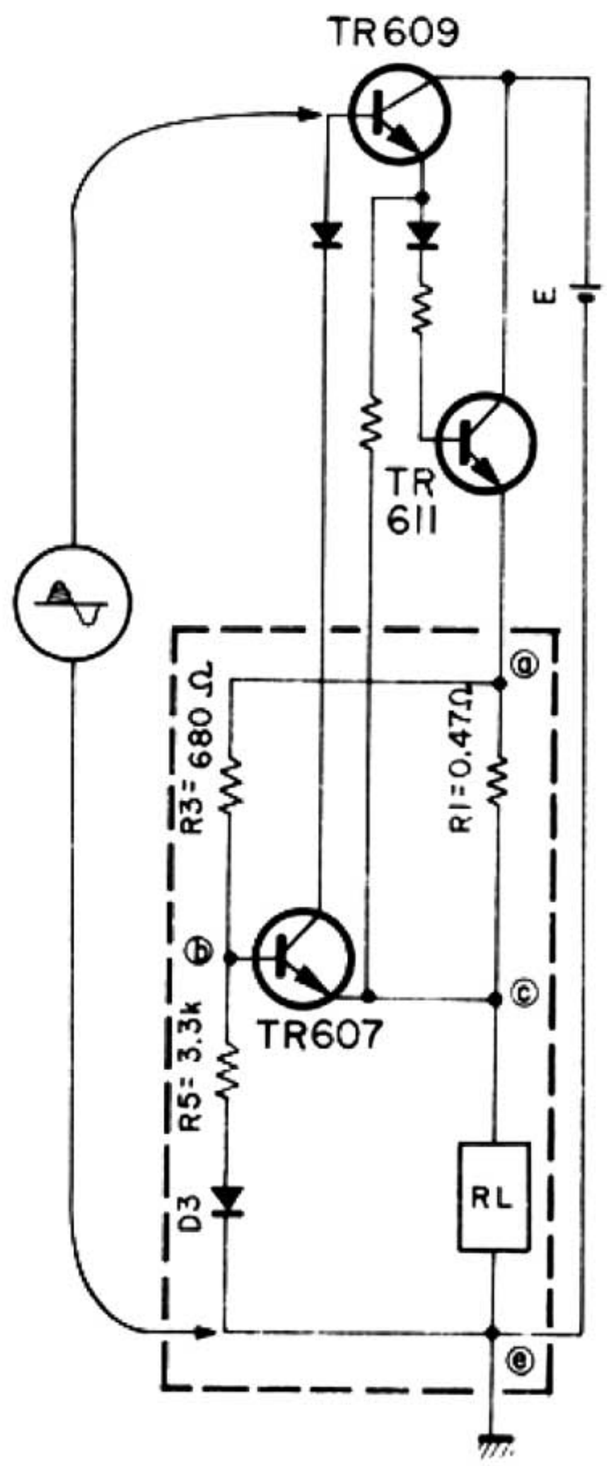

Fig. 2

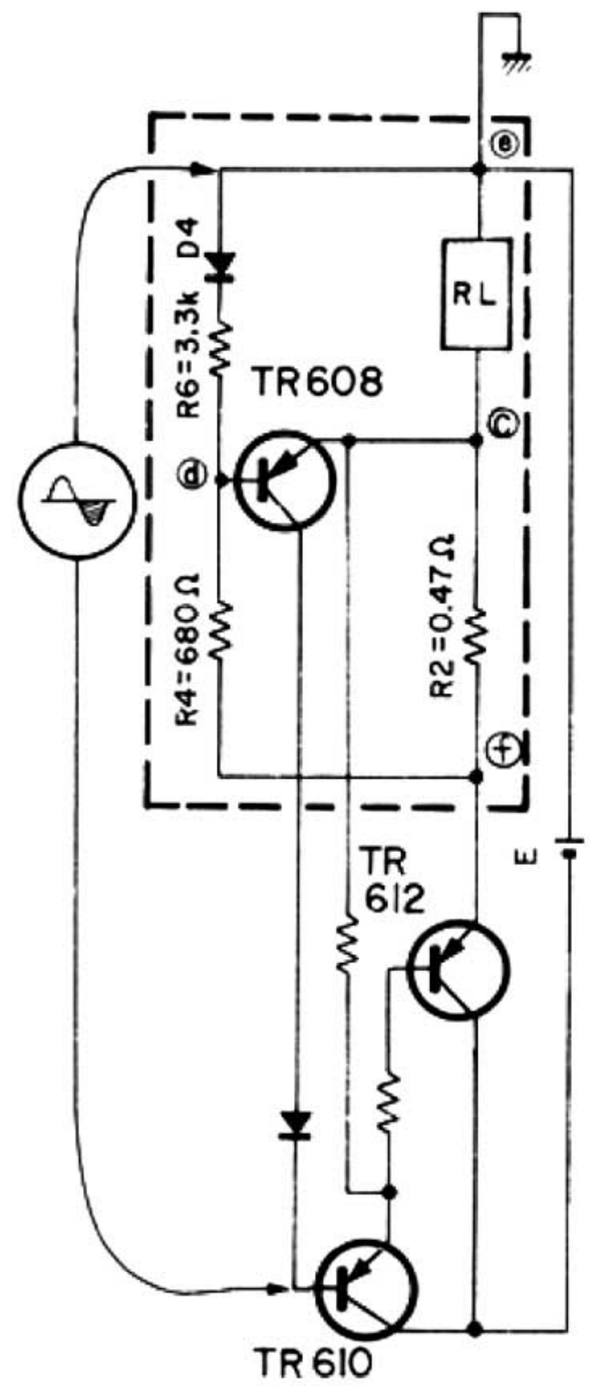

Fig. 3

The circuits indicated by the dotted lines in Figs. 2 and 3 are equivalent to the a, b, c, e and d, f, c, e bridge circuits in Fig. 1.

These bridge circuits detect both the voltage indicated by a drop in collector voltage, and that which shows power transistor current.

With these voltages damage to the set, caused by power transistor operation exceeding the area of safe operation, is avoided; Tr607~610 are suppressed and the signal driving the power transistors is controlled.

In reality, when the amp is operating the bridge, R1–R3–R5–RL and R2–R4–R6–RL bridge circuits maintain the balance.

If load resistance is shorted or too low, the bridge circuits go out of balance.

First, as shown in Fig. 2, if we examine the bridge circuit for the plus half cycle we see that when it is unbalanced the potential at point ⓑ rises above that of point c. Tr607 goes on and the voltage at the base of Tr609 drops.

To avoid damage, power transistor (Tr611) current decreases in a few seconds.

In the same way, as Fig. 3 shows, if there is a short or drop in the minus half cycle bridge circuit load resistance Tr608 goes on and Tr610 impedance rises, causing the power transistor (Tr612) current to drop in a few seconds to avoid damage.

Because of D3 and D4, however, even if the load resistance of these circuits is shorted, power transistor current does not disappear. Approximately 1.3A remains, so the output signal is not completely cancelled.

www.hifiengine.com

SPECIFICATIONS

■ AUDIO SECTION

POWER OUTPUT
Dynamic Power (IHF)
200 watts (4Ω)
200 watts (8Ω)
Continuous RMS Power (each channel driven)
100/100 watts (4Ω) at 1,000Hz
80/80 watts (8Ω) at 1,000Hz
Continuous RMS Power (both channels driven)
100/100 watts (4Ω) at 1,000Hz
75/75 watts (8Ω) at 1,000Hz
Continuous RMS Power (both channels driven)
85/85 watts (4Ω) at 20 to 20,000Hz
70/70 watts (8Ω) at 20 to 20,000Hz

TOTAL HARMONIC DISTORTION
Power Amplifier Only
less than 0.1% at rated power
less than 0.04% at 1 watt
Preamplifier Only (PHONO to PRE OUT)
less than 0.1% at rated power
(AUX to PRE OUT)
less than 0.02% at rated power
Overall (AUX to Power Output)
less than 0.1% at rated power

INTERMODULATION DISTORTION
(70Hz:7,000Hz=4:1 SMPTE method)
Power Amplifier Only
less than 0.1% (8Ω) at rated power
less than 0.05% (8Ω) at 1 watt
Overall (AUX to Power Output)
less than 0.1% (8Ω) at rated output

POWER BANDWIDTH
(IHF, distortion 0.5% const.)
5 to 50,000Hz
FREQUENCY RESPONSE (at 1 watt)
Overall (AUX, TAPE PB to Power Output)
10 to 50,000Hz +0.5dB, −1dB
Overall (MIC to Power Output)
100 to 10,000Hz +0.5dB, −6dB
Power Amplifier Only
10 to 100,000Hz +0dB, −1dB
Deviation from RIAA (30 to 15,000Hz)
+0.2dB, −0.2dB
LOAD IMPEDANCE
4 to 16Ω
DAMPING FACTOR (8Ω)
70 at 1,000Hz
CHANNEL SEPARATION (at rated power, 1,000Hz)
Power Amplifier Only
60dB
Overall from PHONO 1, 2
50dB
Overall from AUX, TAPE PB
50dB
Overall from MIC 50dB
HUM AND NOISE (IHF, Closed circuit A Network)
Overall from PHONO 1, 2
better than 80dB
Overall from MIC better than 70dB
Overall from AUX, TAPE PB
better than 90dB
Power Amplifier Only
better than 100dB

Volume at Minimum
better than 90dB
INPUT SENSITIVITY AND IMPEDANCE
(at rated power, 1,000Hz)
PHONO 1 3mV (30kΩ, 50kΩ, 100kΩ)
PHONO 2 3mV (50kΩ)
PHONO 1, 2 Max. Input Capability
280mV (T.H.D. 0.1%)
MIC 3mV (50kΩ)
MIC Max. Input Capability
450mV (T.H.D. 0.3%)
AUX 1, 2 150mV (40kΩ)
TAPE PB A, B 150mV (40kΩ)
Power Amplifier Input
775mV (40kΩ)
OUTPUT LEVEL AND IMPEDANCE
(at rated power, 1,000Hz)
TAPE REC OUT A, B
150mV (2kΩ)
PRE OUT 775mV (2kΩ)
3,000mV (Max. Output T.H.D. 0.1%)
TONE CONTROLS
BASS +15dB, −15dB at 50Hz
TREBLE +10dB, −10dB at 10,000Hz
FILTERS
LOW −3dB at 20Hz (12dB/oct.)
HIGH −3dB at 6,000Hz (6dB/oct.)
LOUDNESS CONTROL
(Continuous Loudness Volume at Minimum)
+10dB at 100Hz, +5dB at 10,000Hz

■ TUNER SECTION

FM:
Tuning Range 88MHz to 108MHz
Usable Sensitivity (IHF)
1.7μV
Quieting Slope 55dB at 5μV
60dB at 10μV
Image Frequency Rejection
110dB
IF Rejection 110dB
Spurious Response Rejection
110dB
AM Rejection 55dB

Capture Ratio 1.0dB
Alternate Channel Selectivity (IHF)
80dB
Signal-to-Noise Ratio
75dB
Total Harmonic Distortion
MONO 0.15% at 400Hz
0.3% at 50 to 10,000Hz
STEREO 0.3% at 400Hz
1.0% at 50 to 10,000Hz
Stereo Separation 45dB at 400Hz
35dB at 50 to 10,000Hz

Frequency Response
+0.5dB, −0.5dB at 50Hz to 10,000Hz
+1.5dB, −1.5dB at 20Hz to 15,000Hz
Sub-Carrier Suppression
60dB
Muting Override Signal Level
10μV to 30μV variable
Antenna Impedance
300Ω balanced
75Ω unbalanced
IF Out Level and Impedance
400mV/1kΩ

■ GENERAL

Semiconductors 2 IC's; 2 MOS FET's; 98 Transistors; 10 FET's; 3LD's; 56 Diodes; 6 Zener Diodes
Power Source AC110,117,130,220,240V, 50/60Hz

Power Consumption
Rated
Canadian Model 320W 400VA
Except Canadian Model 250W
Max. 430W

AC outlets
Switched 2 (total 200 watts)
Unswitched 2 (total 200 watts)
Dimensions 510mm (20" W x 174mm (6¾") (H x 335mm (13¼") D
Weight 19 kg (41.9 lbs.)

www.hifiengine.com

EXTERNAL VIEW

FRONT PANEL

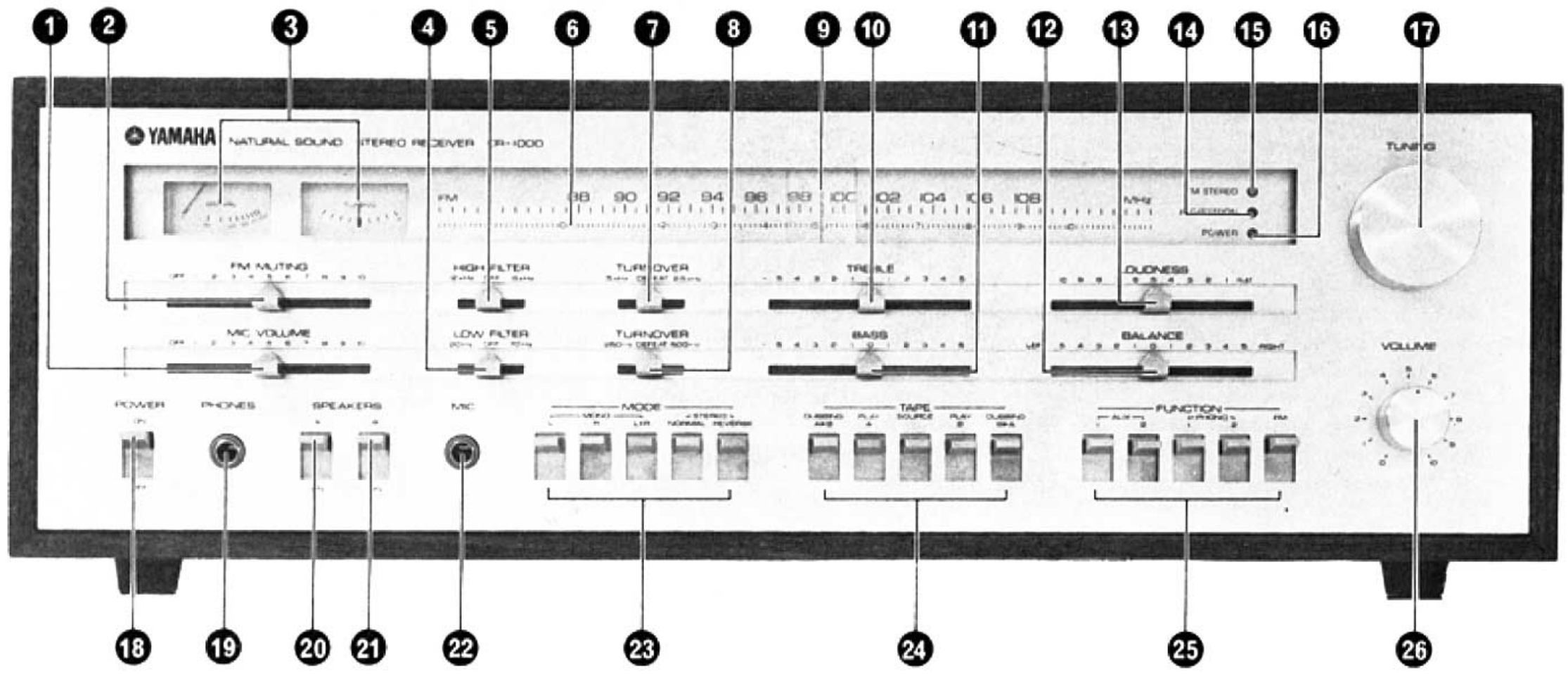

REAR PANEL (U.S.& CANADIAN MODELS)

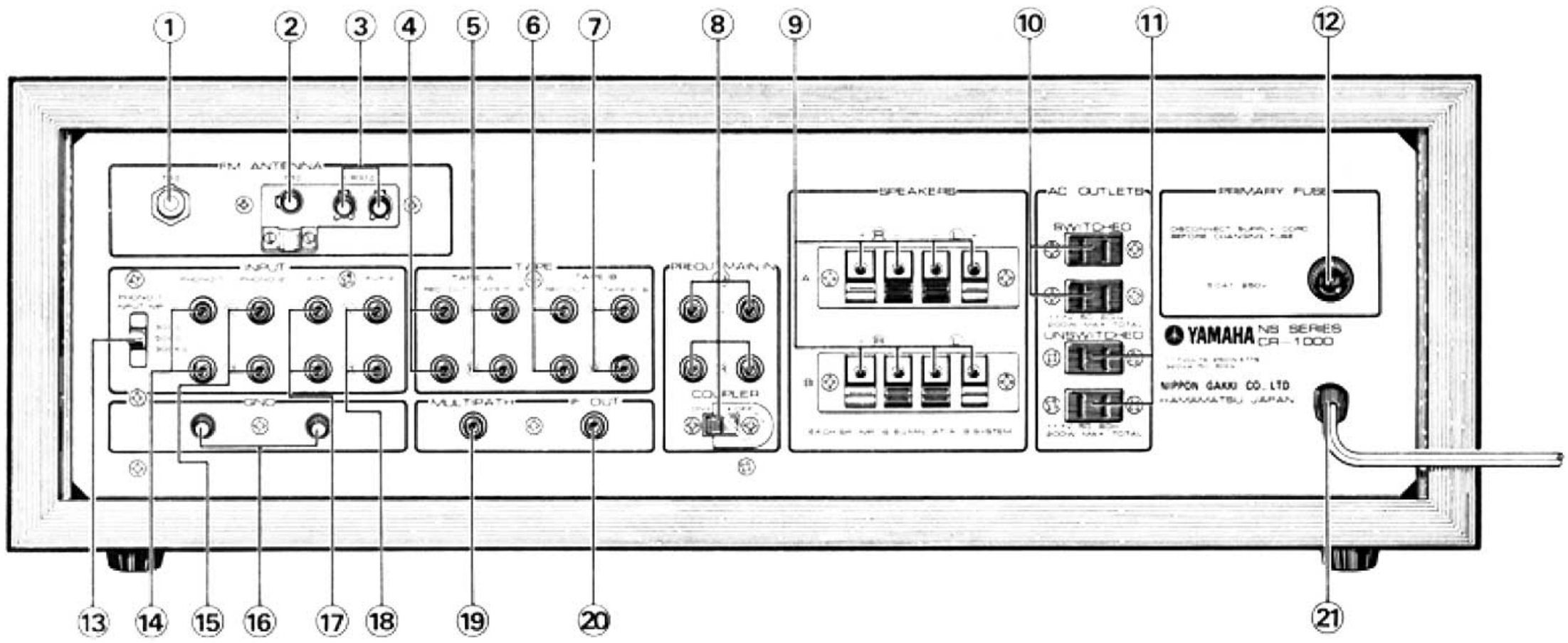

REAR PANEL (EUROPEAN MODEL)

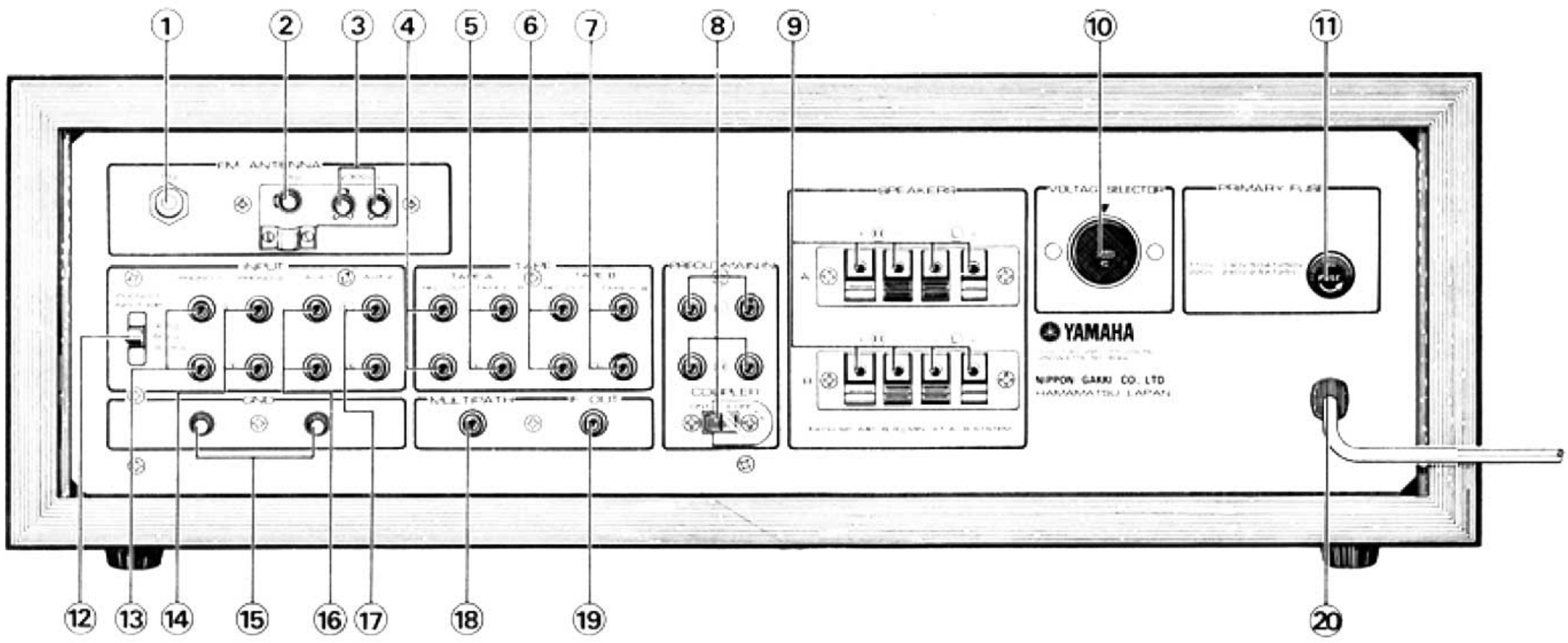

FRONT PANEL

1. MIC VOLUME CONTROL
2. FM MUTING LEVEL CONTROL
3. SIGNAL & TUNING METER
4. LOW FILTER SWITCH
5. HIGH FILTER SWITCH
6. DIAL SCALE
7. TREBLE TURNOVER SWITCH
8. BASS TURNOVER SWITCH
9. DIAL POINTER
10. TREBLE TONE CONTROL
11. BASS TONE CONTROL
12. BALANCE CONTROL
13. LOUDNESS CONTROL
14. AFC/STATION INDICATOR
15. FM STEREO INDICATOR
16. POWER INDICATOR
17. TUNING KNOB
18. POWER SWITCH
19. PHONES JACK
20. SPEAKER SWITCH A
21. SPEAKER SWITCH B
22. MIC JACK
23. MODE SELECTOR SWITCH
24. TAPE MONITOR SWITCH
25. FUNCTION SELECTOR SWITCH
26. VOLUME CONTROL

REAR PANEL (U.S.& CANADIAN MODELS)

1. FM ANTENNA CONNECTOR (75Ω UNBALANCED)
2. FM ANTENNA TERMINAL (75Ω UNBALANCED)
3. FM ANTENNA TERMINAL (300Ω BALANCED)
4. TAPE A REC OUT JACKS
5. TAPE A P/B JACKS
6. TAPE B REC OUT JACKS
7. TAPE B P/B JACKS
8. PRE OUT/MAIN IN JACKS & COUPLER SWITCH
9. SPEAKER TERMINALS
10. AC OUTLETS (SWITCHED)
11. AC OUTLETS (UNSWITCHED)
12. PRIMARY FUSE HOLDER
13. PHONO 1 INPUT IMPEDANCE SELECTOR SWITCH
14. PHONO 1 INPUT JACKS
15. PHONO 2 INPUT JACKS
16. GROUND TERMINALS
17. AUX 1 INPUT JACKS
18. AUX 2 INPUT JACKS
19. MULTIPATH JACK
20. IF OUT JACK
21. AC CORD

REAR PANEL (EUROPEAN MODLE)

1. FM ANTENNA CONNECTOR (75Ω UNBALANCED)
2. FM ANTENNA TERMINAL (75Ω UNBALANCED)
3. FM ANTENNA TERMINAL (300Ω BALANCED)
4. TAPE A REC OUT JACKS
5. TAPE A P/B JACKS
6. TAPE B REC OUT JACKS
7. TAPE B P/B JACKS
8. PRE OUT MAIN IN JACKS & COUPLER SWITCH
9. SPEAKER TERMINALS
10. VOLTAGE SELECTOR
11. PRIMARY FUSE HOLDER
12. PHONO 1 INPUT IMPEDANCE SELECTOR
13. PHONO 1 INPUT JACKS
14. PHONO 2 INPUT JACKS
15. GROUND TERMINALS
16. AUX 1 INPUT JACKS
17. AUX 2 INPUT JACKS
18. MULTIPATH JACK
19. IF OUT JACK
20. AC CORD

www.hifiengine.com

INTERNAL VIEW

TOP VIEW

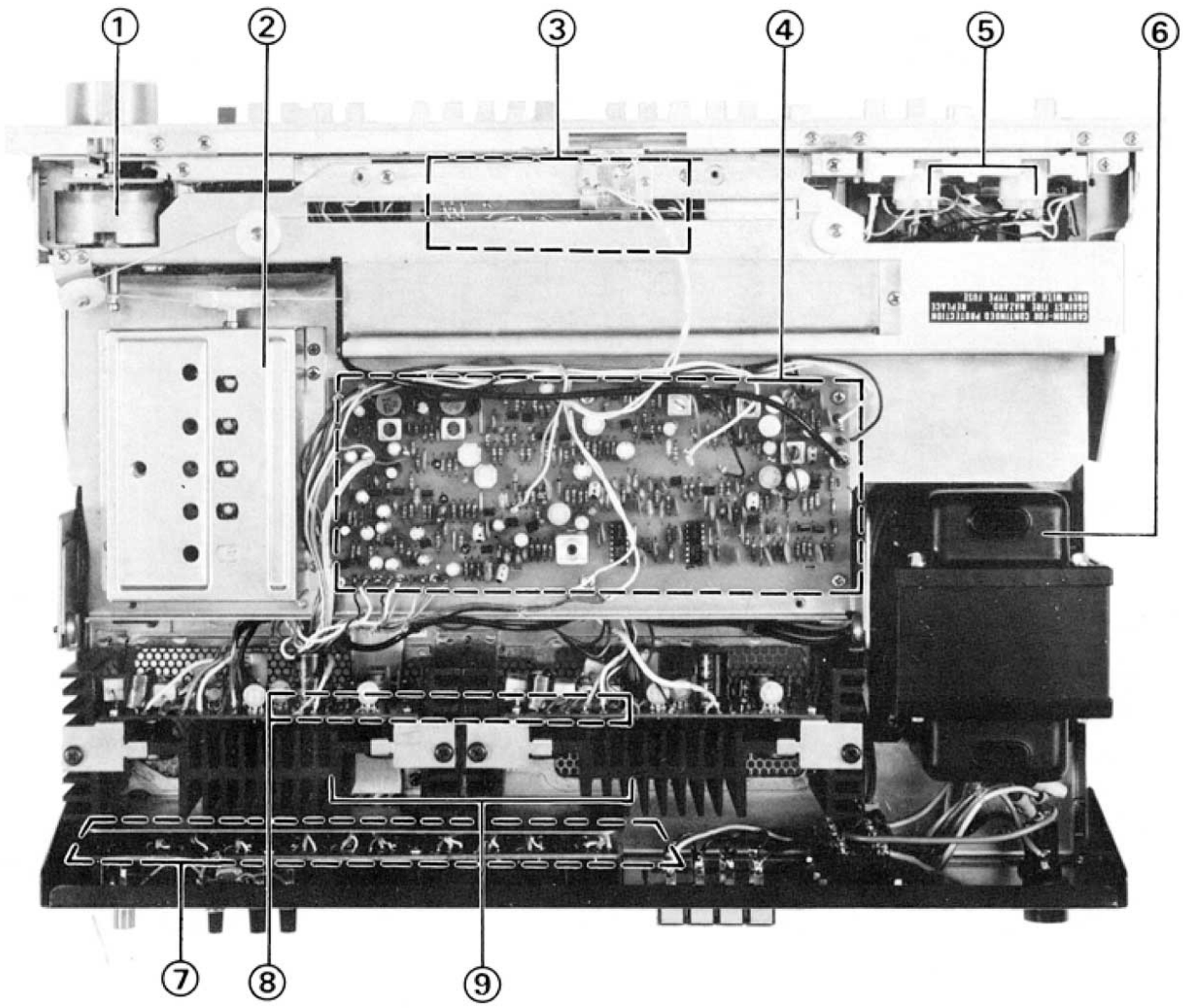

❶ FLY WHEEL

❷ RF FRONT END PACK
- FS-112U
  - GENERAL, U.S.& CANADIAN, AUSTRALIAN, EUROPEAN MODELS
- FS-112S
  - SOUTH AFRICAN MODEL

❸ TONE CONTROL AMP CIRCUIT BOARD
- NA06365

❹ TUNER CIRCUIT BOARD
- NA06372
  - SOUTH AFRICAN MODEL
- NA06405
  - U.S. & CANADIAN MODELS
- NA06406
  - GENERAL, AUSTRALIAN, EUROPEAN MODELS

❺ SIGNAL & TUNING METER

❻ POWER TRANSFORMER
- GA60580

❼ REAR PANEL CIRCUIT BOARD
- NA06358

❽ MAIN AMP CIRCUIT BOARD
- NA06401
  - :EXCEPT EUROPEAN MODELS
- NA06402
  - :EUROPEAN MODELS ONLY

❾ HEAT SINK

BOTTOM VIEW

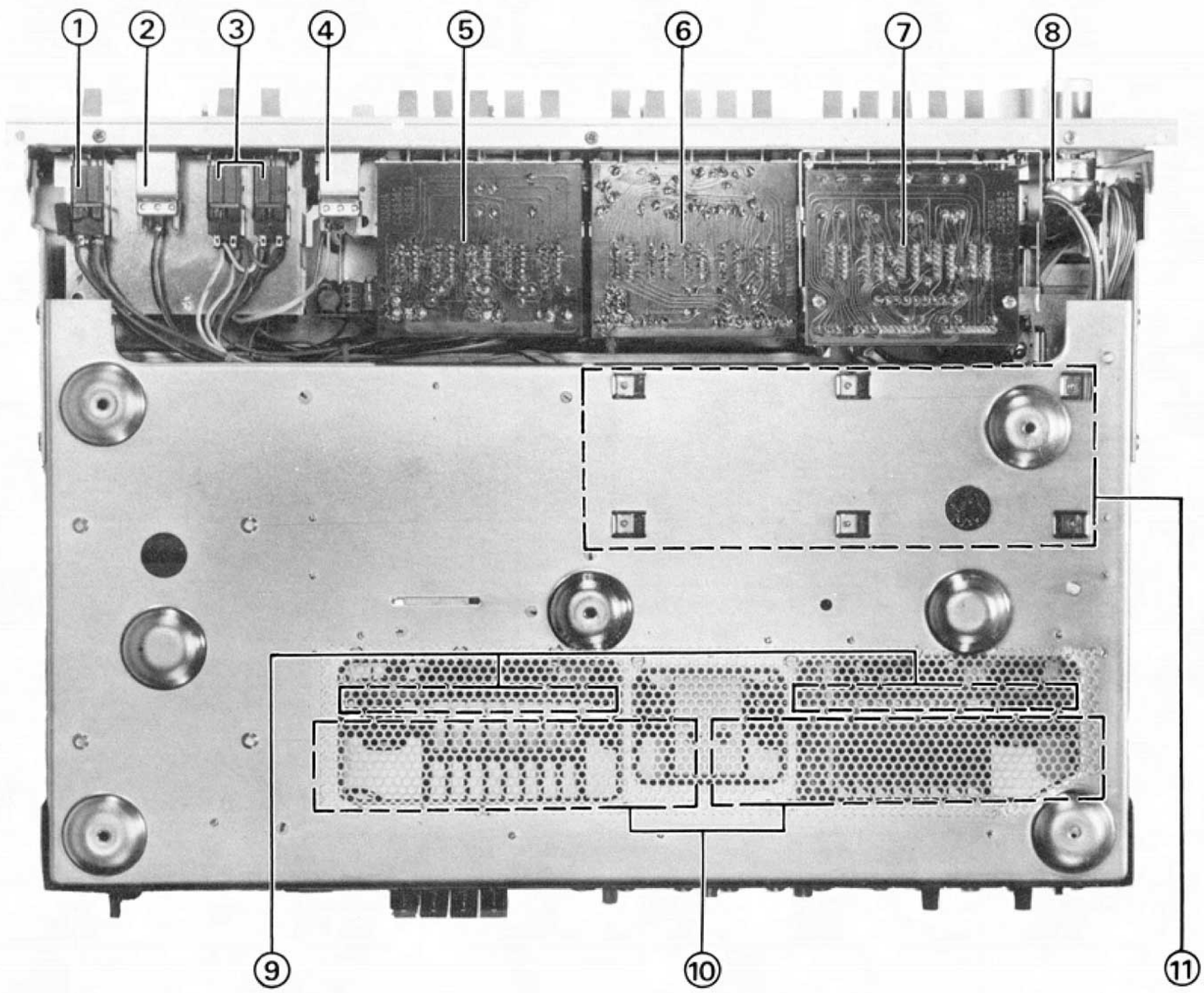

❶ POWER SWITCH
❷ PHONES JACK
❸ SPEAKER SWITCH
❹ MIC JACK
❺ MODE SWITCH CIRCUIT BOARD
NA06369
❻ TAPE MONITOR SWITCH CIRCUIT BOARD
NA0370
❼ FUNCTION CIRCUIT BOARD
NA06367
❽ VARIABLE RESISTOR
(VOLUME CONTROL : A100kΩ)
❾ MAIN AMP CIRCUIT BOARD
❿ HEAT SINK
⓫ POWER CIRCUIT BOARD
NA06357

www.hifiengine.com

PARTIAL DISASSEMBLY

BEFORE DISASSEMBLY

- The screwdriver for each screw should match the screw size. If you use a smaller or larger size it will damage the groove.
- If you use excessive force on the printed circuit board it will crack or cut the print wiring, so be careful.
- When using a soldering iron finish all work as quickly as possible.

  Be careful not to install levers and knobs in the wrong place or upside-down. See Fig. 1.

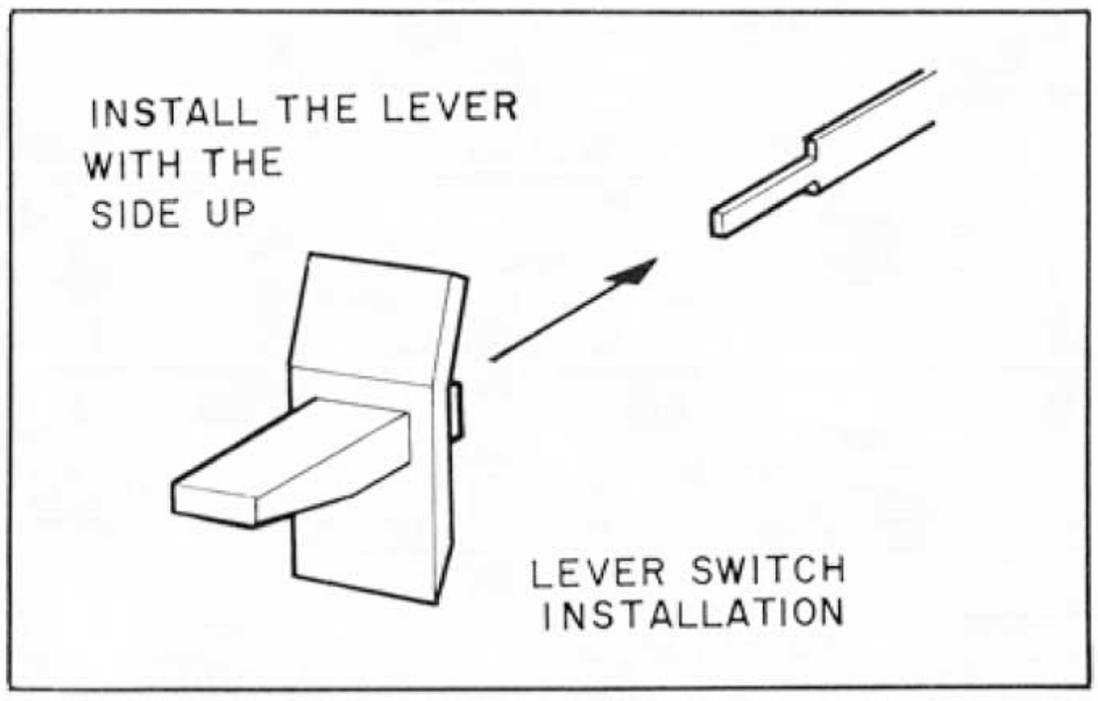

Fig. 1

CABINET REMOVAL

a. Remove screws 1~7 as shown in Fig. 2.

b. Set the dial pointer at 92 MHz, then remove the cabinet.

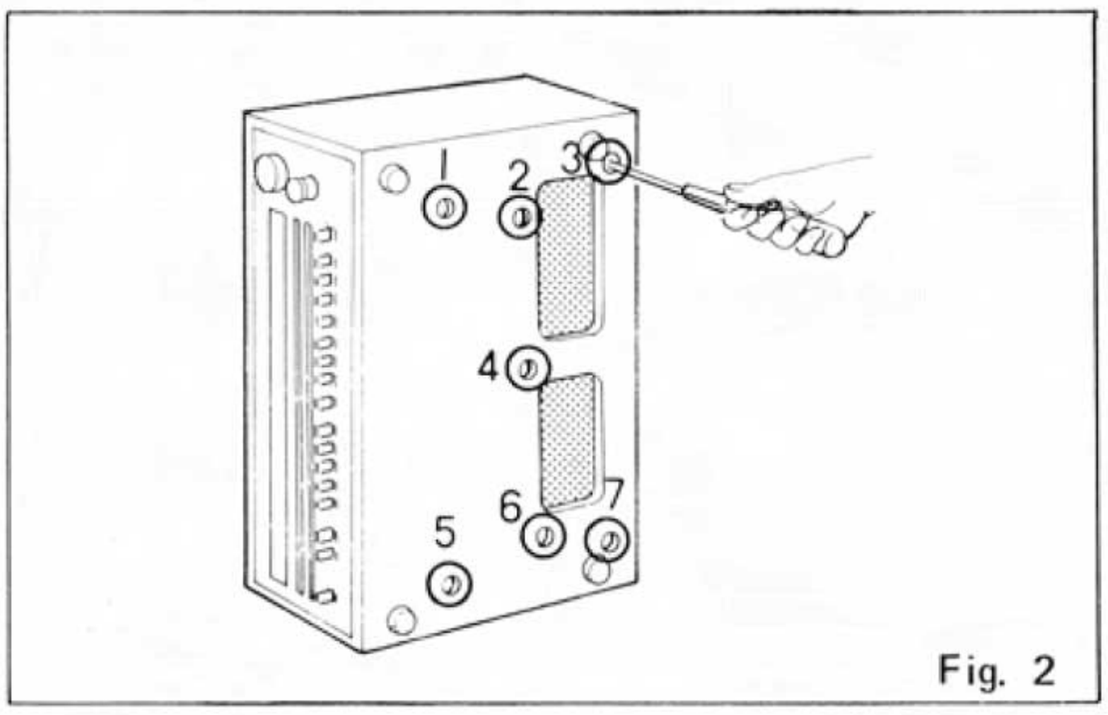

Fig. 2

MAIN AMP UNIT REMOVAL

a. Remove screws of the both side of heat sink (1 & 2 or 1′ & 2′) shown in Photo 1.

b. Then lift up to remove the heat sink and main amp circuit board.

c. Remove screws (1~4) shown in Photo 2, and then pull up to remove the power transistors.

d. Remove screws 1, 2 shown in Photo 3, then separate the main amp circuit board from the heat sink.

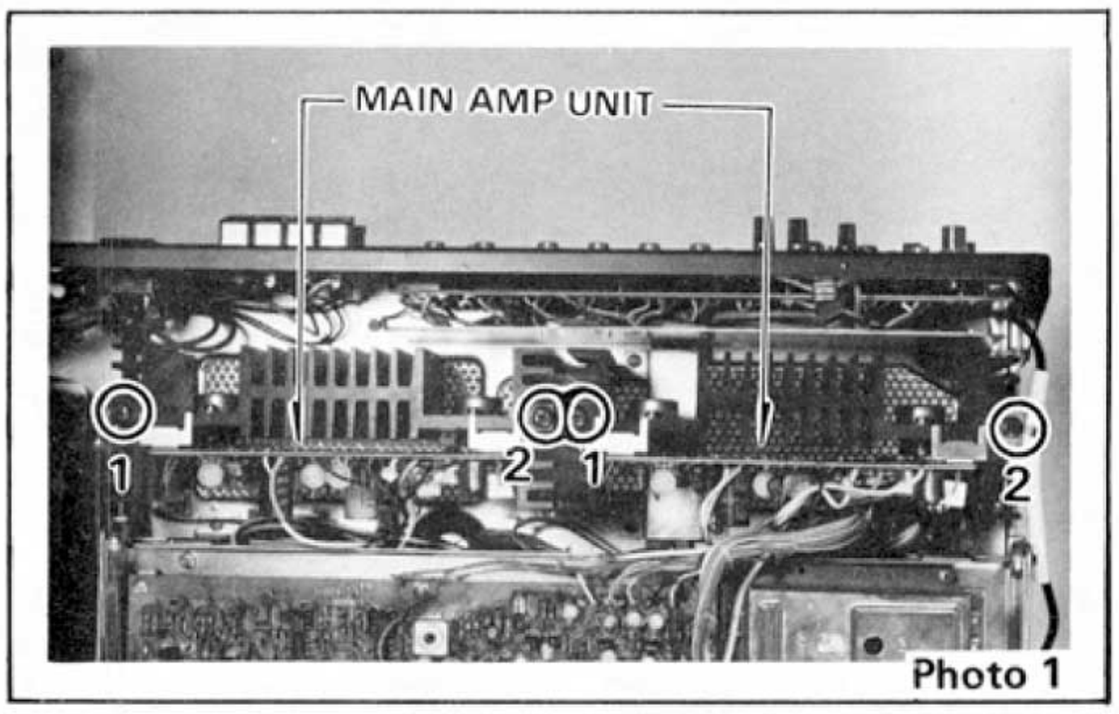

Photo 1

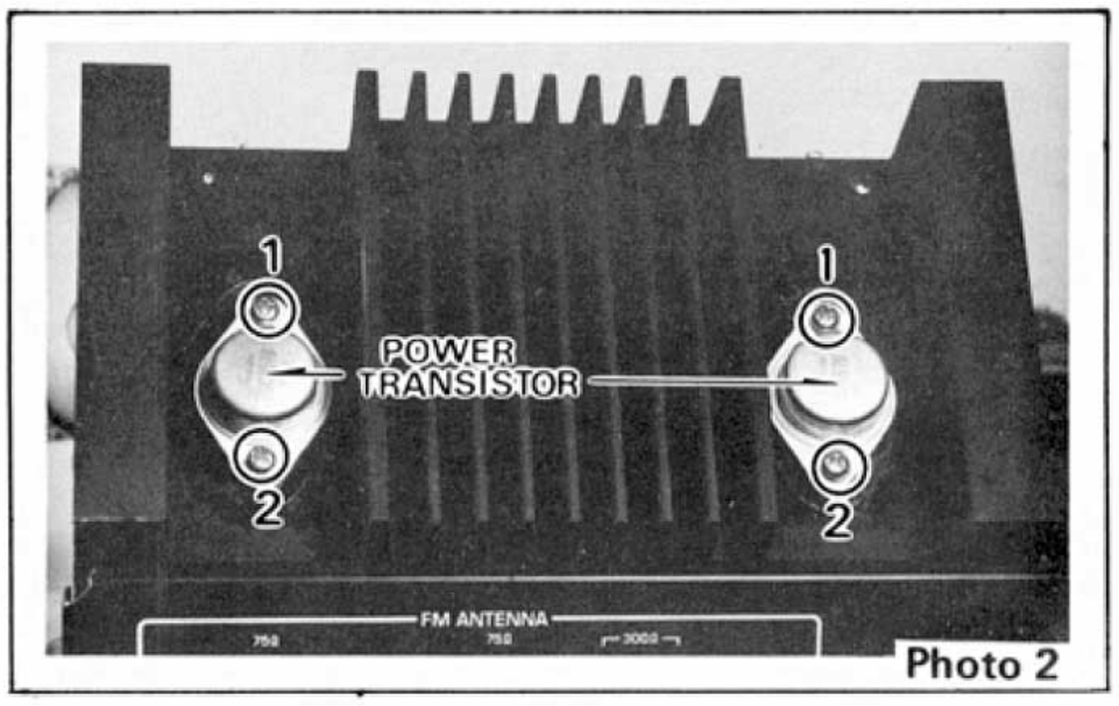

Photo 2

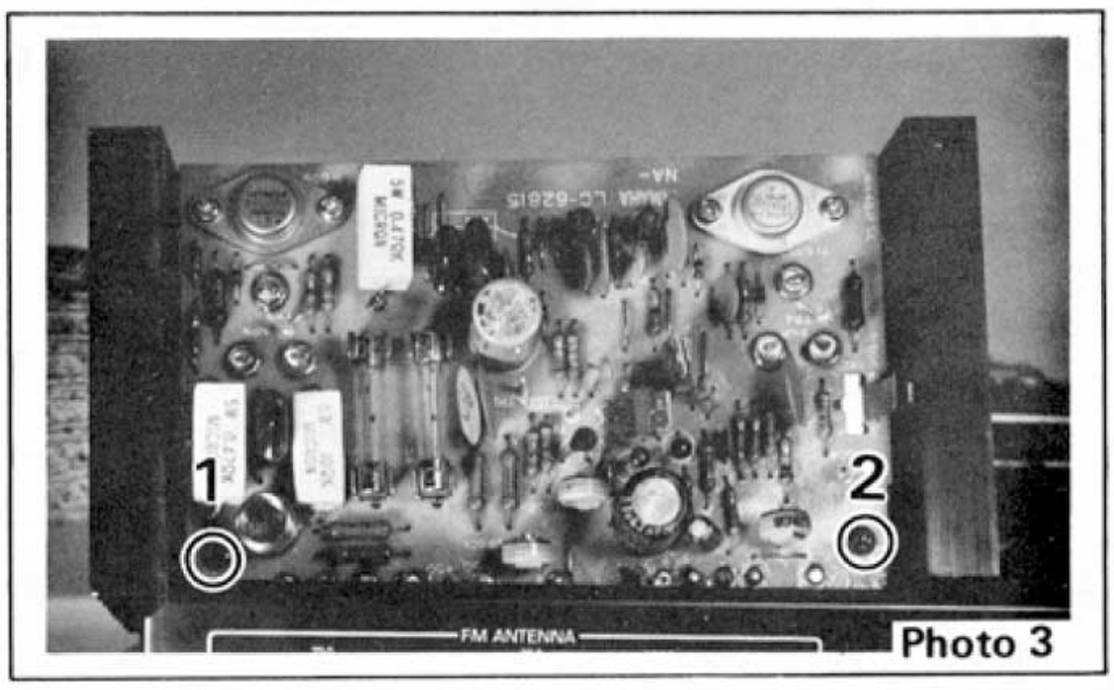

Photo 3

Note: When reinstalling the power transistor to the heat sink, be sure to fully lubricate with silicon grease. Do not tighten the fixing screws with excessive force. Attach as shown in Fig. 3.

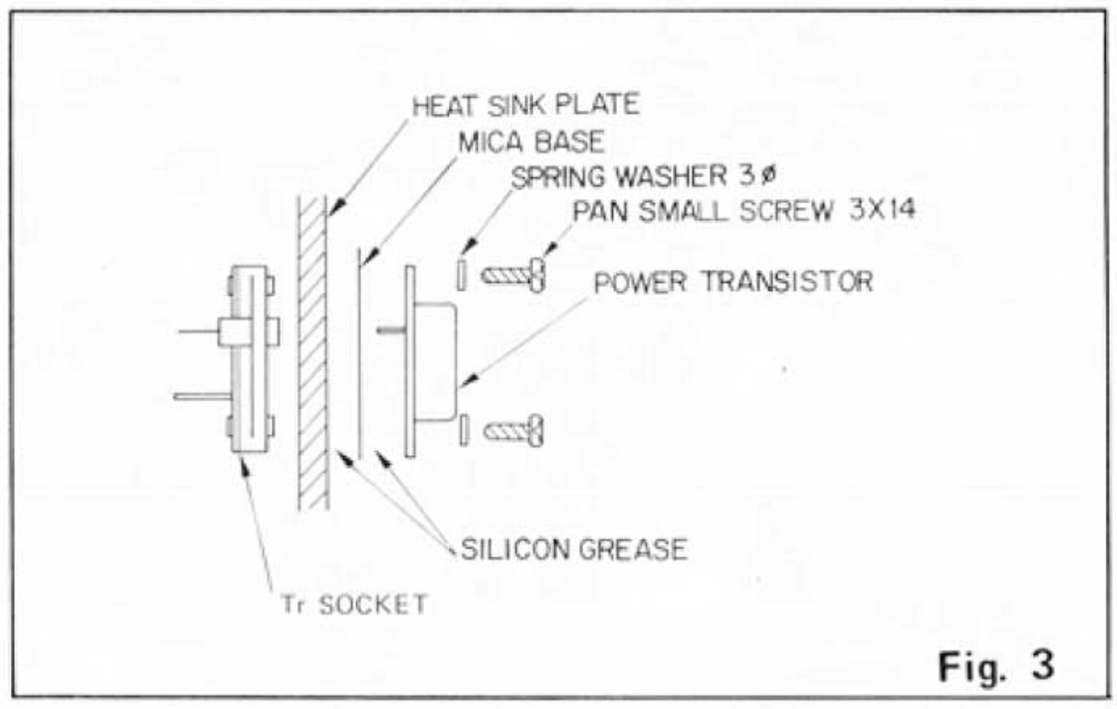

Fig. 3

SIGNAL, TUNING METER REMOVAL

a. Pull off the meter lamps with their bushings.
b. Remove the meter fixing springs (Photo 4) shown in Photo 5. Then remove the meters.

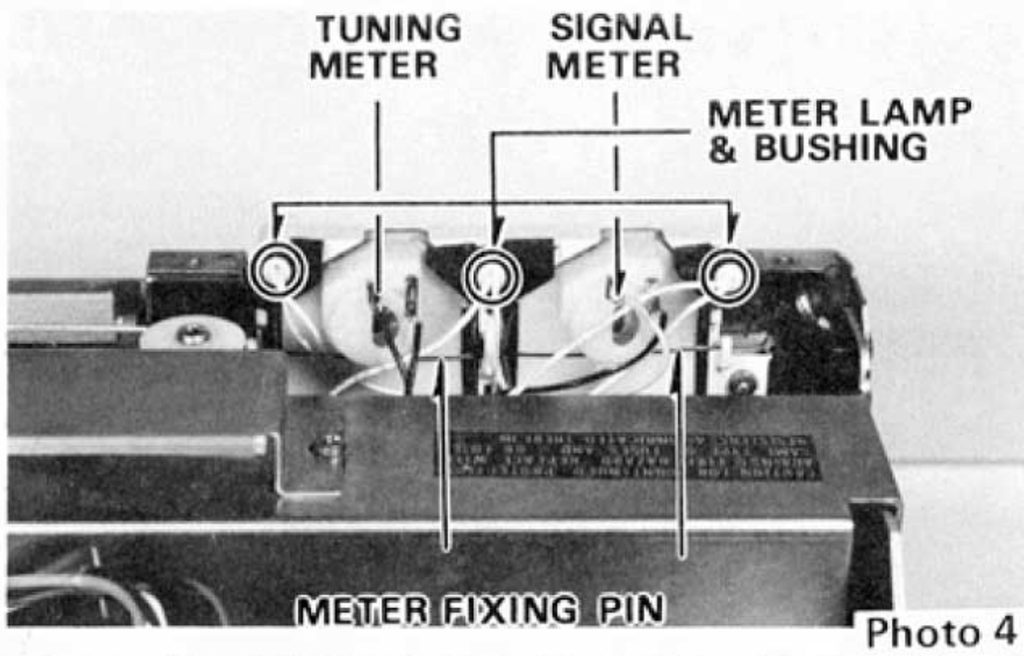

Photo 4

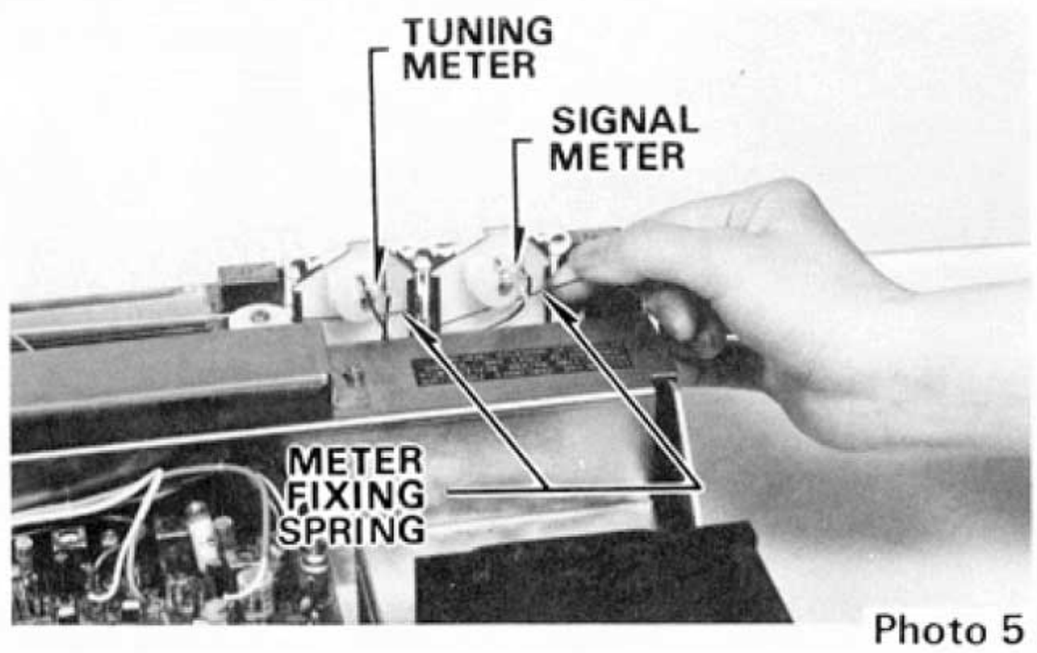

Photo 5

TUNER CIRCUIT BOARD REMOVAL

Remove screws 1~6 shown in Photo 6. Then lift the tuner circuit board up to remove it.

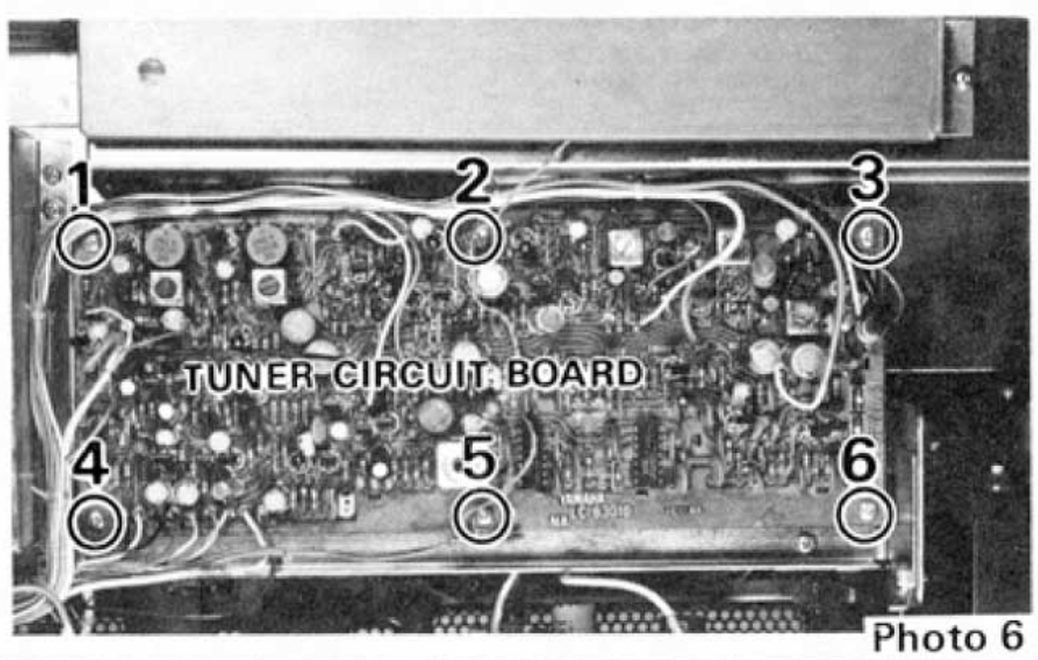

Photo 6

TUNER UNIT REMOVAL

a. Remove red-headed screws 1~4 shown in Photo 7.
b. Remove red-headed screws shown in Photo 8.
c. Set the dial pointer at 92 MHz.

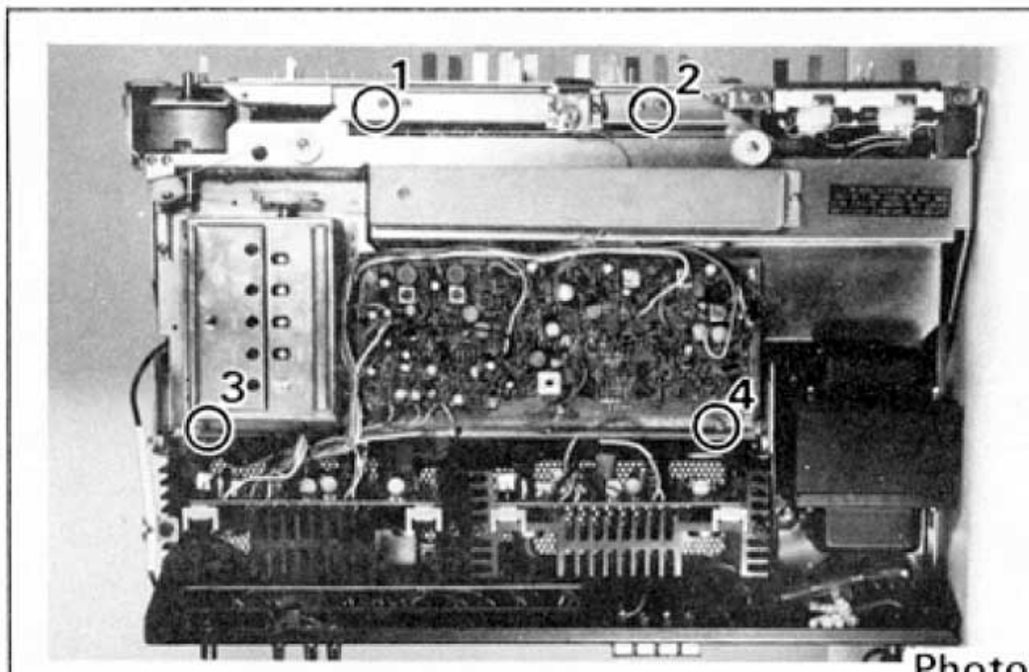

Photo 7

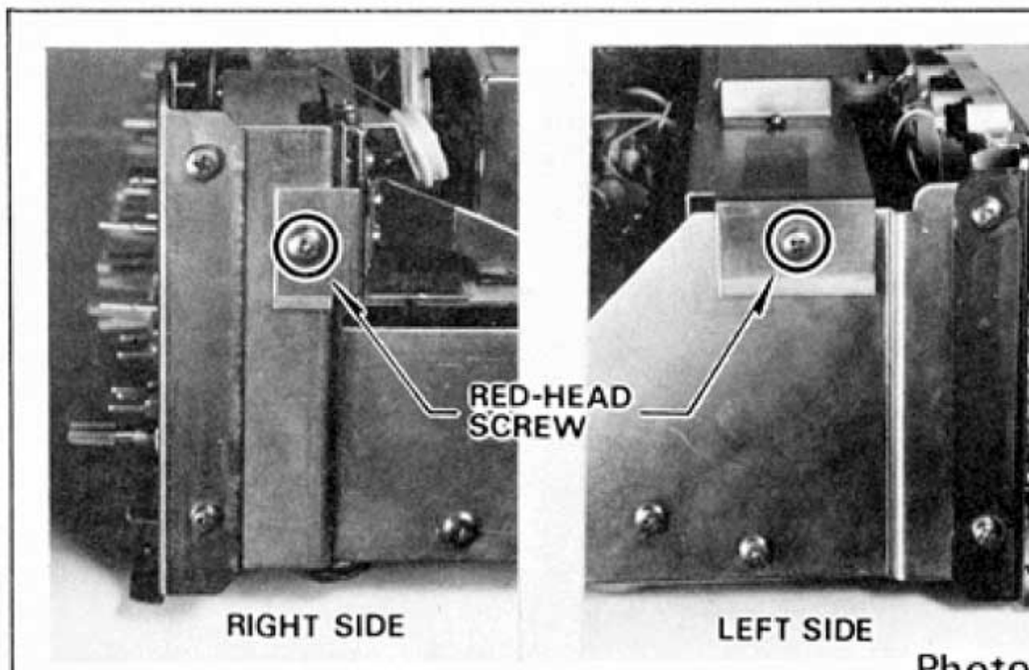

Photo 8

d. Pull the TUNING knob to remove it with hexagonal wrench.
e. Lift up to set the tuner unit as shown in Photo 9.

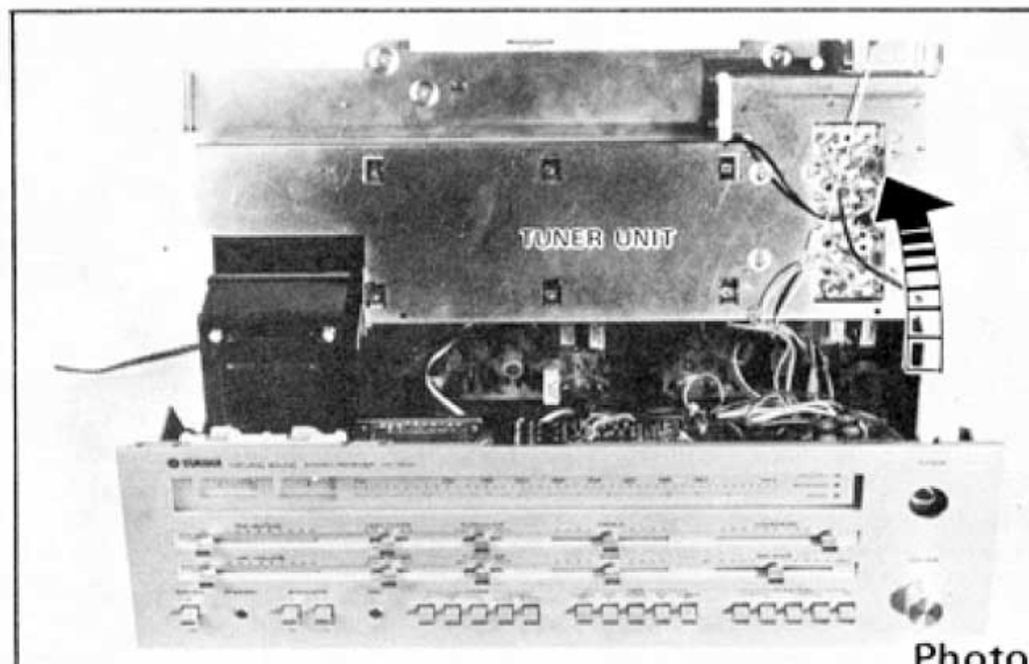

Photo 9

www.hifiengine.com

POWER CIRCUIT BOARD REMOVAL

a. First remove the tuner unit.

b. Remove screws 1~6 shown in Photo 10, then lift up the power circuit board to remove it.

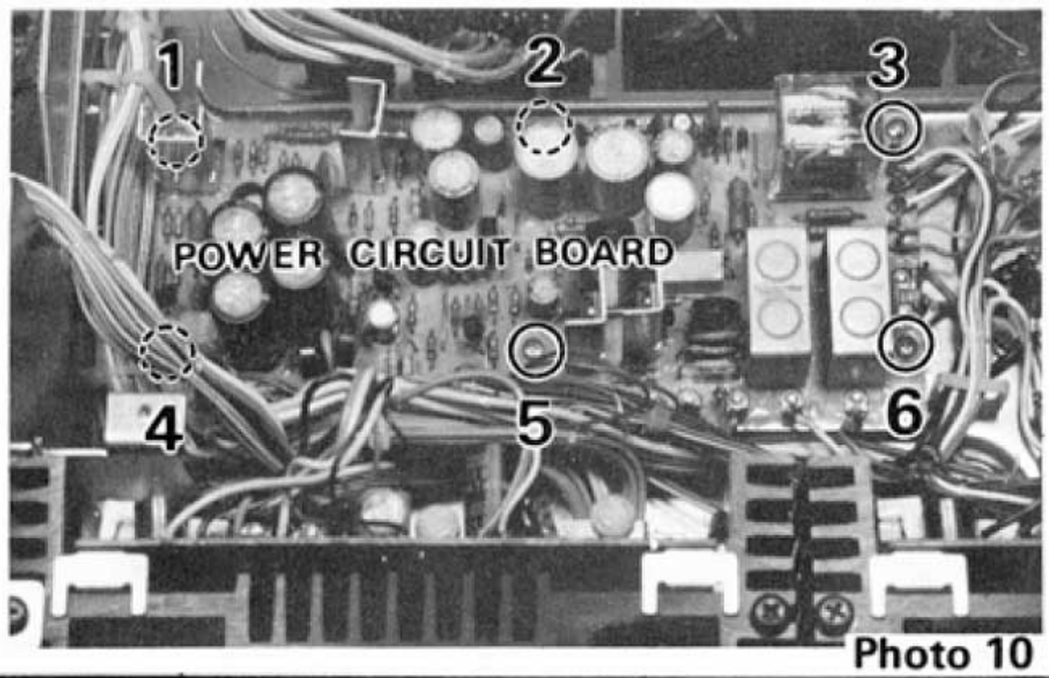

Photo 10

FRONT PANEL REMOVAL

a. Remove the TUNING knob by using the hexagonal wrench provided.

b. Pull off the VOLUME, FM MUTING, MIC VOLUME, HIGH FILTER, LOW FILTER, TURNOVER, BASS, TREBLE, LOUDNESS and BALANCE knobs.

c. Remove screws 1~6 shown in Photo 11. Then pull the front panel forward to remove it.

Note: Refer to Fig. 4 when reattaching the knobs.

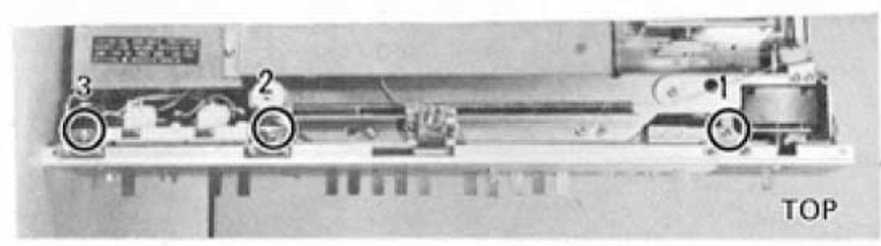

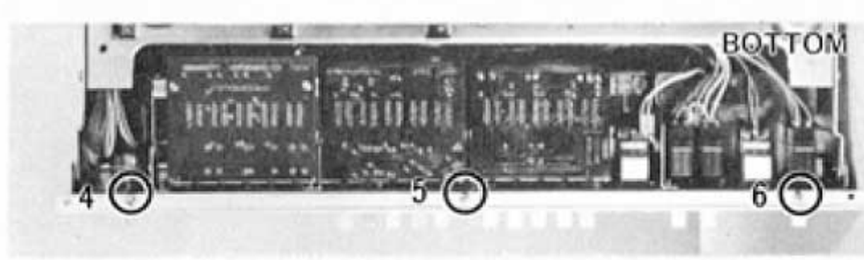

Photo 11

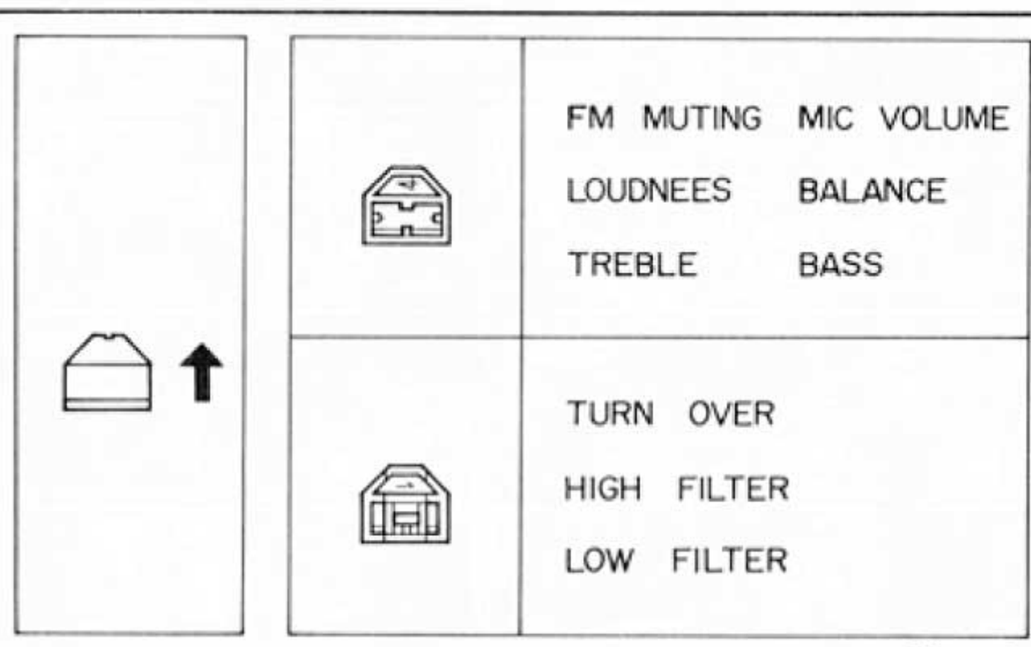

Fig. 4

SUB CHASSIS UNIT REMOVAL

a. Remove the dial pointer unit from the rail as shown in Photo 12.

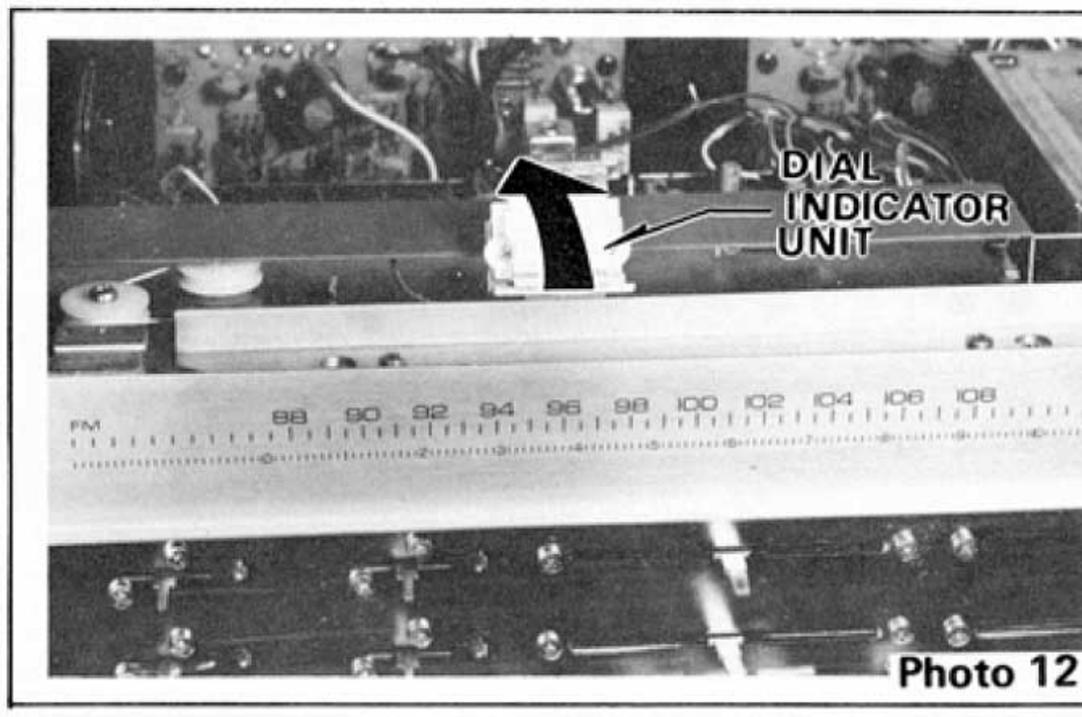

Photo 12

b. Remove screws 1, 2 and loosen screws 3, 4 shown in Photo 13.

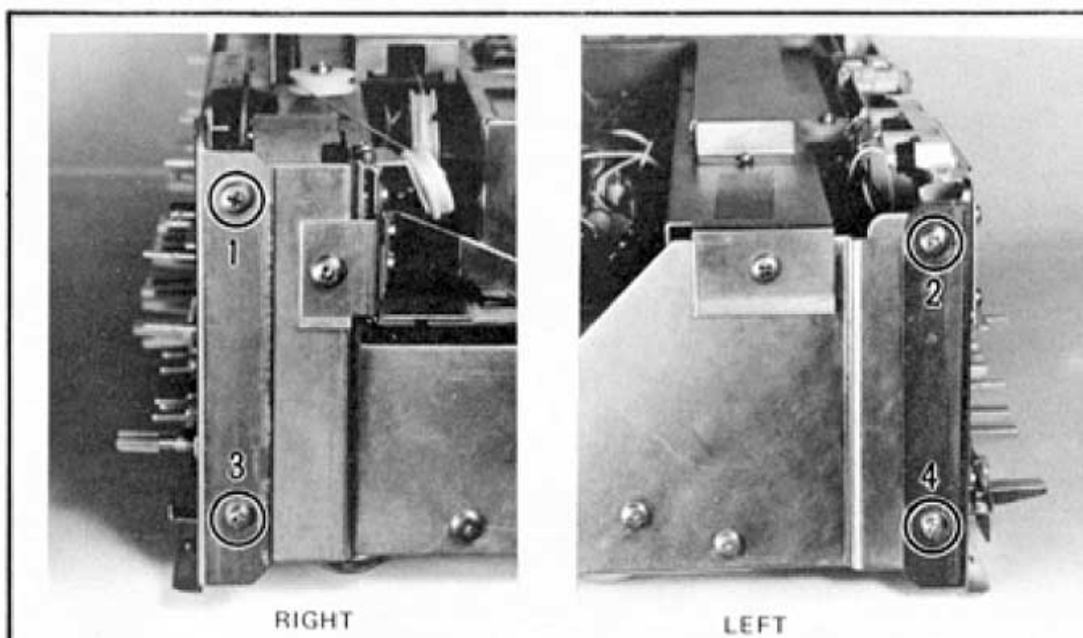

Photo 13

c. Pull the sub chassis unit forward to tilt it as shown in Photo 14.

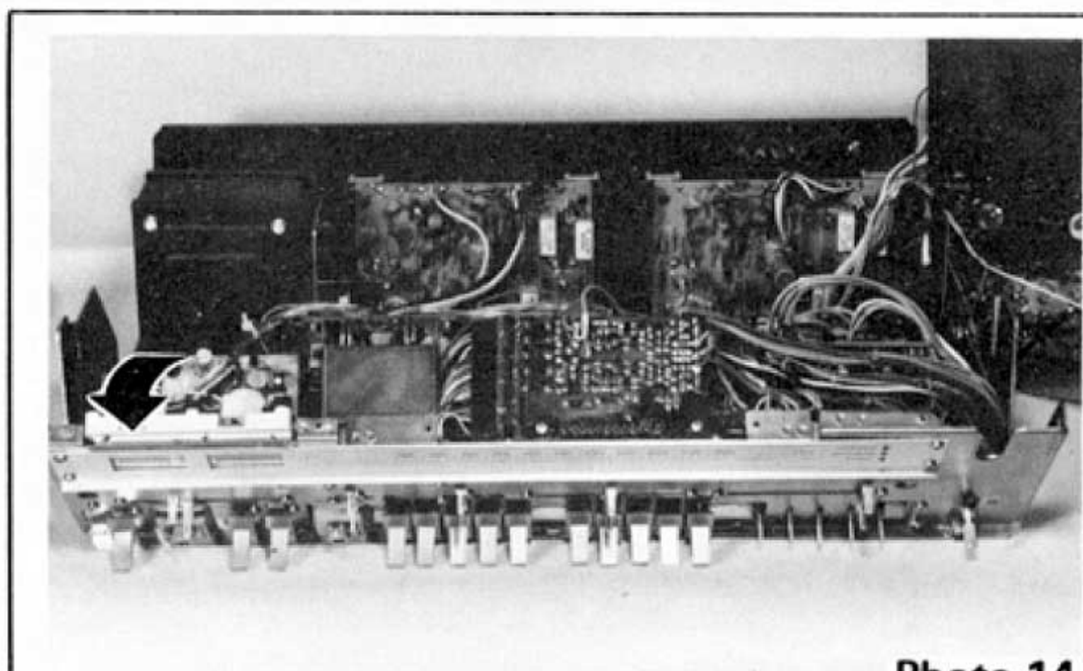
Photo 14

EQUALIZER AMP CIRCUIT BOARD REMOVAL

Pull off the board in the direction shown by the arrow to remove it as shown in Photo 15.

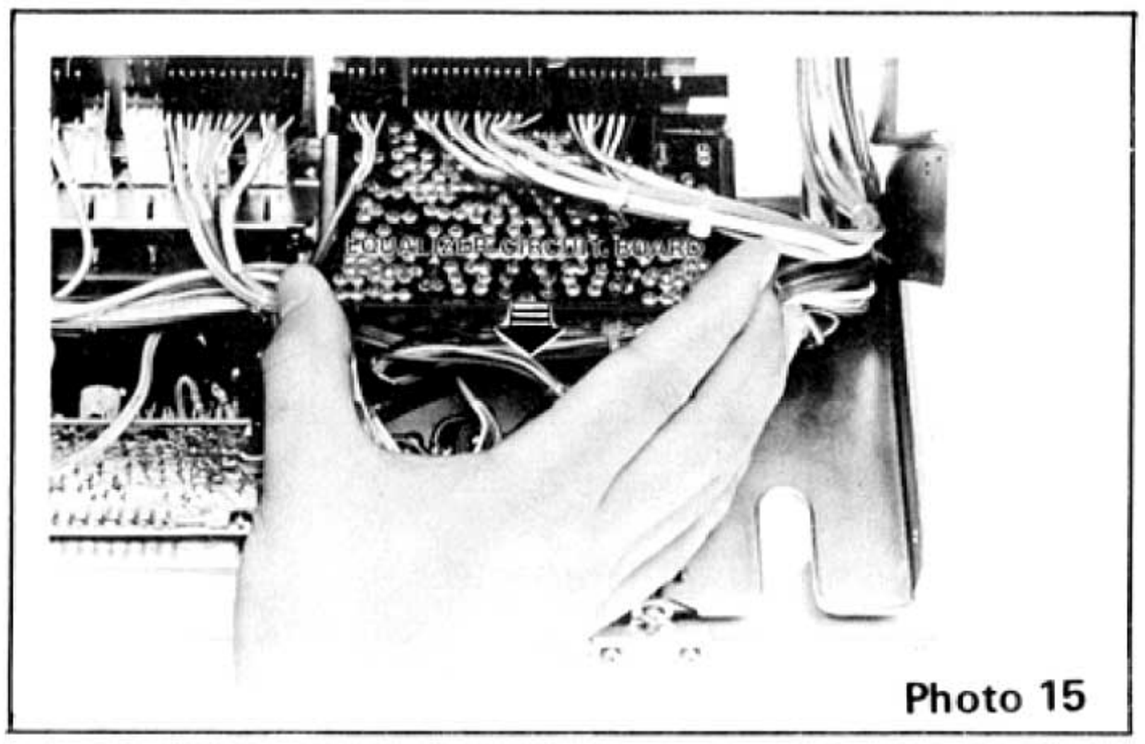

Photo 15

FILTER AMP CIRCUIT BOARD REMOVAL

Remove screws 1, 2, then pull off the board in the direction of the arrow to remove it as shown in Photo 17.

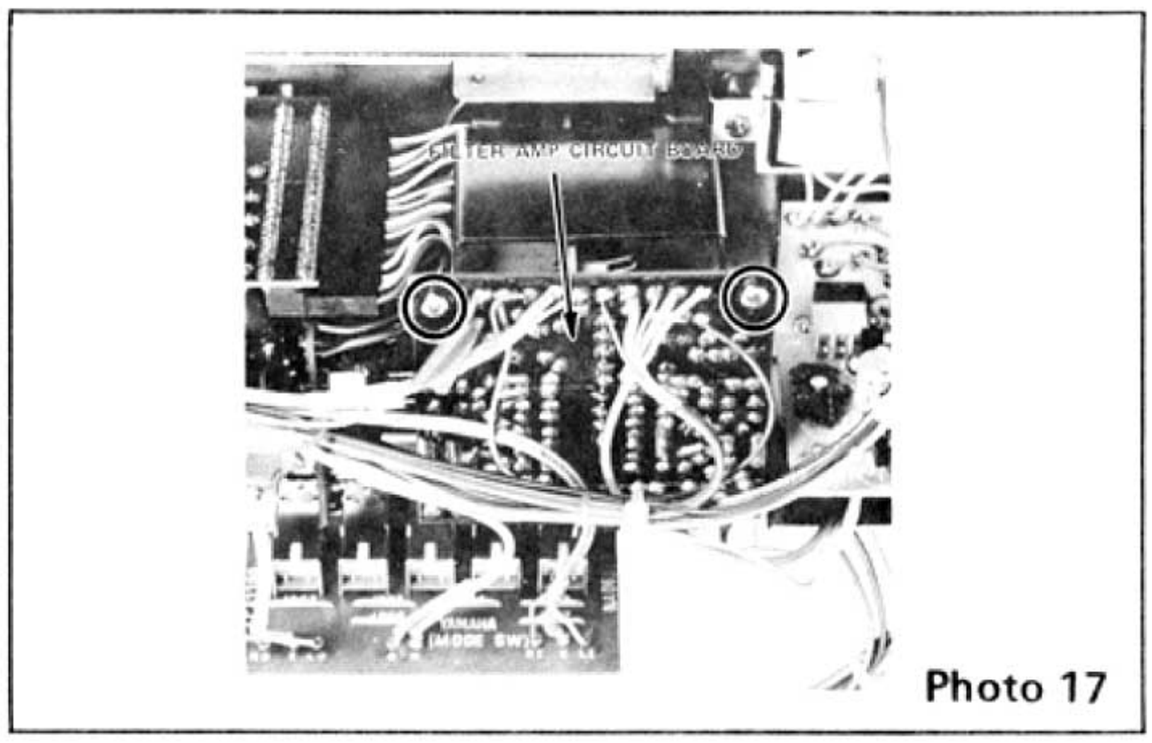

Photo 17

TONE CONTROL AMP CIRCUIT BOARD REMOVAL

Remove screws 1, 2, then pull off the CIS connector in the direction of the arrow as shown in Photo 16. Then pull up the tone control amp circuit board to remove it.

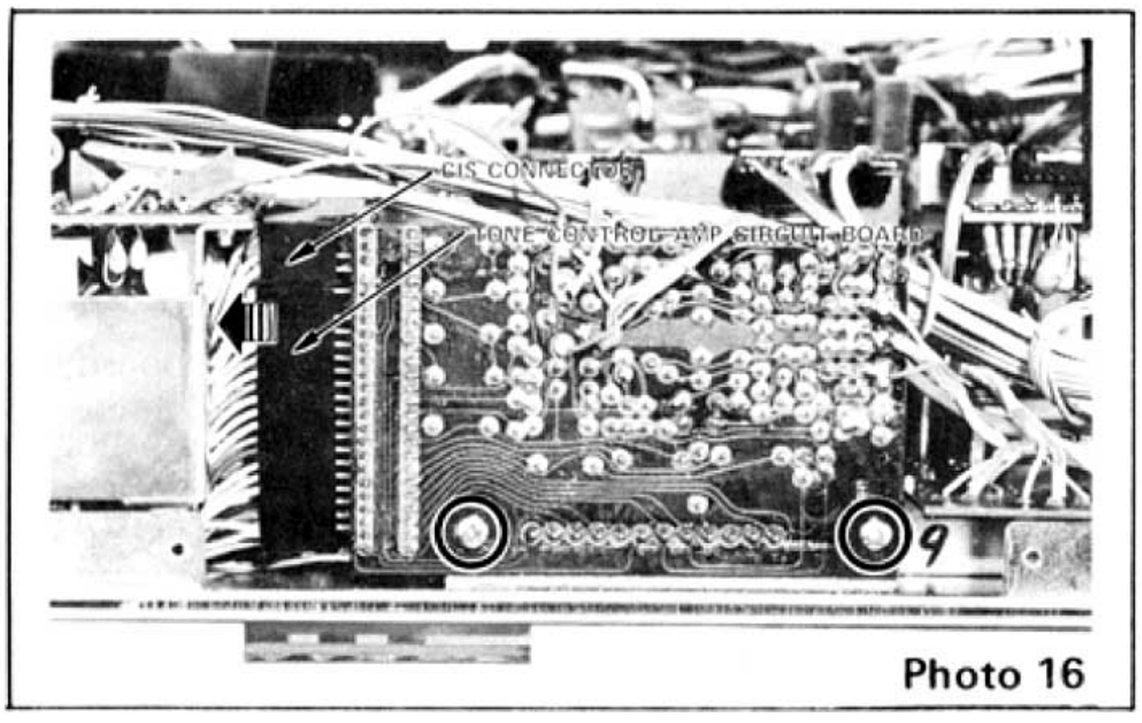

Photo 16

MIC AMP CIRCUIT BOARD REMOVAL

Pull out the sheet holder shown in Photo 18, then pull off the board in the direction of the arrow to remove it.

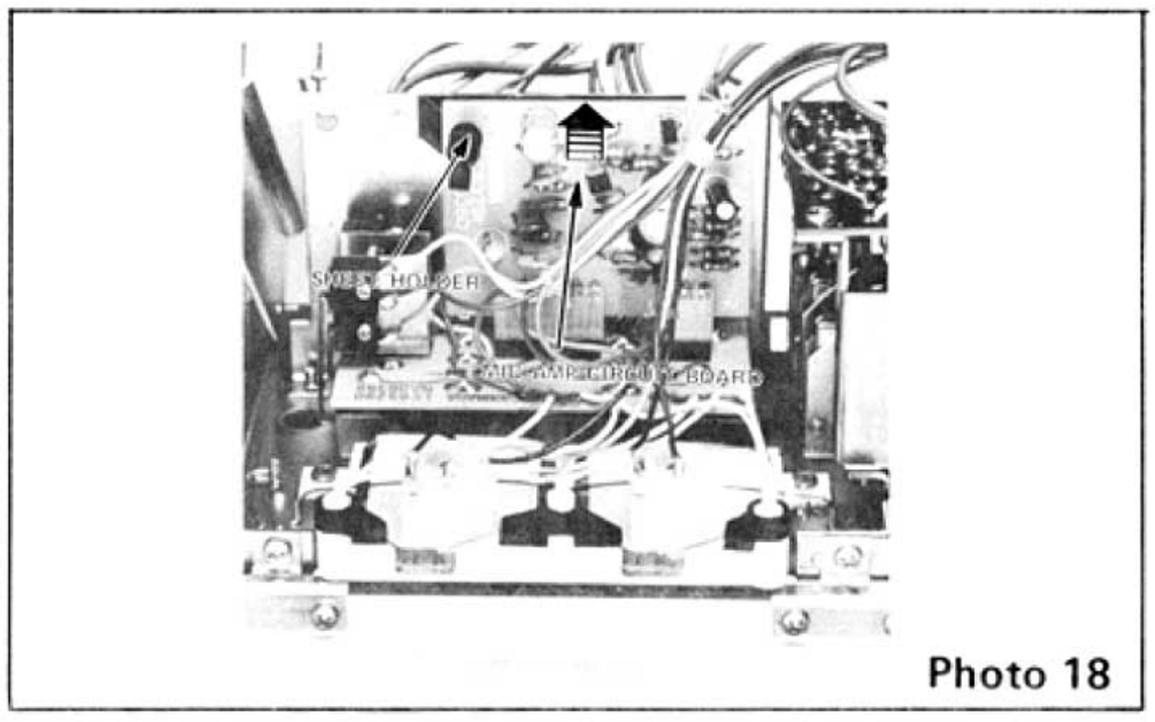

Photo 18

www.hifiengine.com

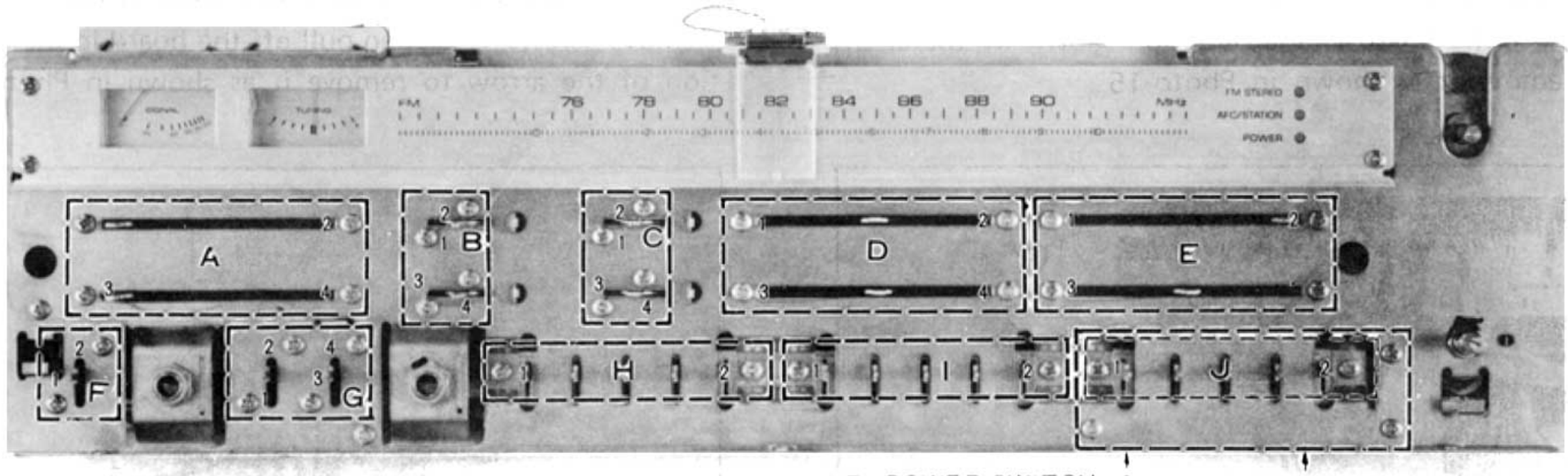

A: MIC VOLUME CIRCUIT BOARD
B: FILTER SWITCH CIRCUIT BOARD
C: TONE CONTROL SWITCH CIRCUIT BOARD
D: TONE CONTROL VOLUME CIRCUIT BOARD
E: LOUNDNESS CIRCUIT BOARD
F: POWER SWITCH
G: SPEAKER SWITCH
H: MODE SWITCH CIRCUIT BOARD
I: TAPE MONITOR SWITCH CIRCUIT BOARD
J: FUNCTION SWITCH CIRCUIT BOARD

Photo 19

MIC VOLUME CIRCUIT BOARD REMOVAL

a. Remove the mic amp circuit board (refer to Photo19).
b. Remove screws A-(1~4), then remove the board.

FILTER SWITCH CIRCUIT BOARD REMOVAL

Remove screws B-(1~4), then remove the board.

TONE CONTROL SWITCH CIRCUIT BOARD REMOVAL

a. Pull off the CIS connector shown in Photo 20.
b. Remove screws C-(1~4), then remove the board.

TONE CONTROL VOLUME CIRCUIT BOARD REMOVAL

a. Remove the tone control amp circuit board.
b. Remove screws D-(1~4), then remove the board.

LOUDNESS CIRCUIT BOARD REMOVAL

Remove screws E-(1~4), then remove the board.

POWER SWITCH REMOVAL

Remove screws F-(1, 2).

SPEAKER SWITCH REMOVAL

Remove screws G-(1~4).

MODE SWITCH CIRCUIT BOARD REMOVAL

Remove screws H-(1, 2), then remove the board.

TAPE MONITOR SWITCH CIRCUIT BOARD REMOVAL

a. Pull off the CIS connector shown in Photo 21.
b. Remove screws I-(1, 2), then remove the board.

FUNCTION SWITCH CIRCUIT BOARD REMOVAL

a. Remove the equalizer amp circuit board.
b. Remove screws J-(1, 2) and (3, 4), then remove the board.

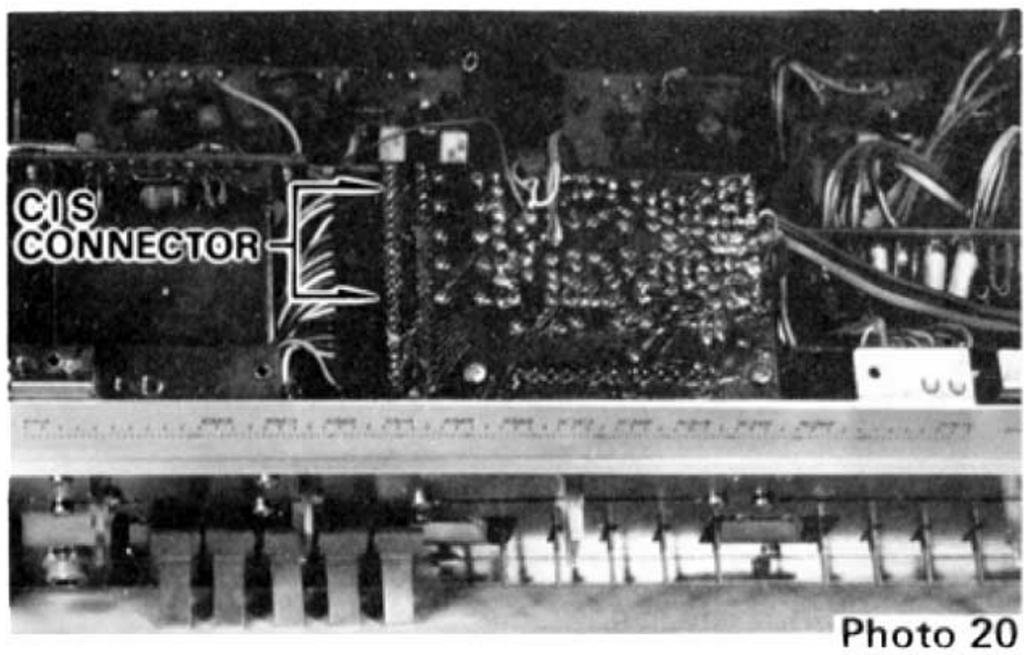

Photo 20

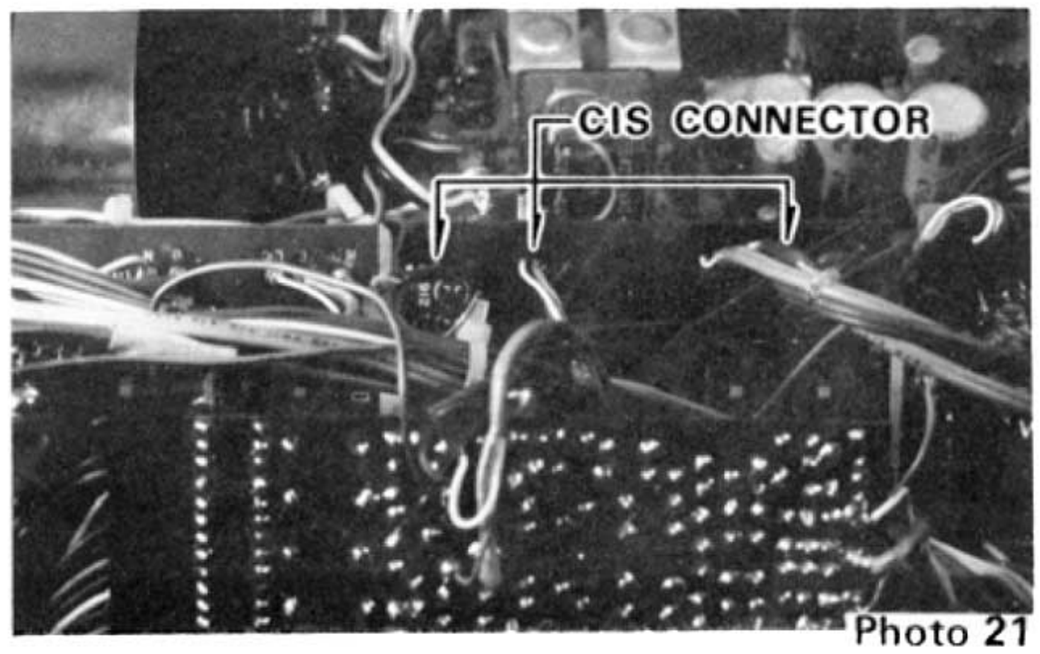

Photo 21

DROPPING THE REAR PANEL

a. Remove screws 2, 4 and loosen screws 1, 3 shown in Photo 22.

b. Remove screws 1~3 shown in Photo 23, then drop the rear panel as shown in Photo 24.

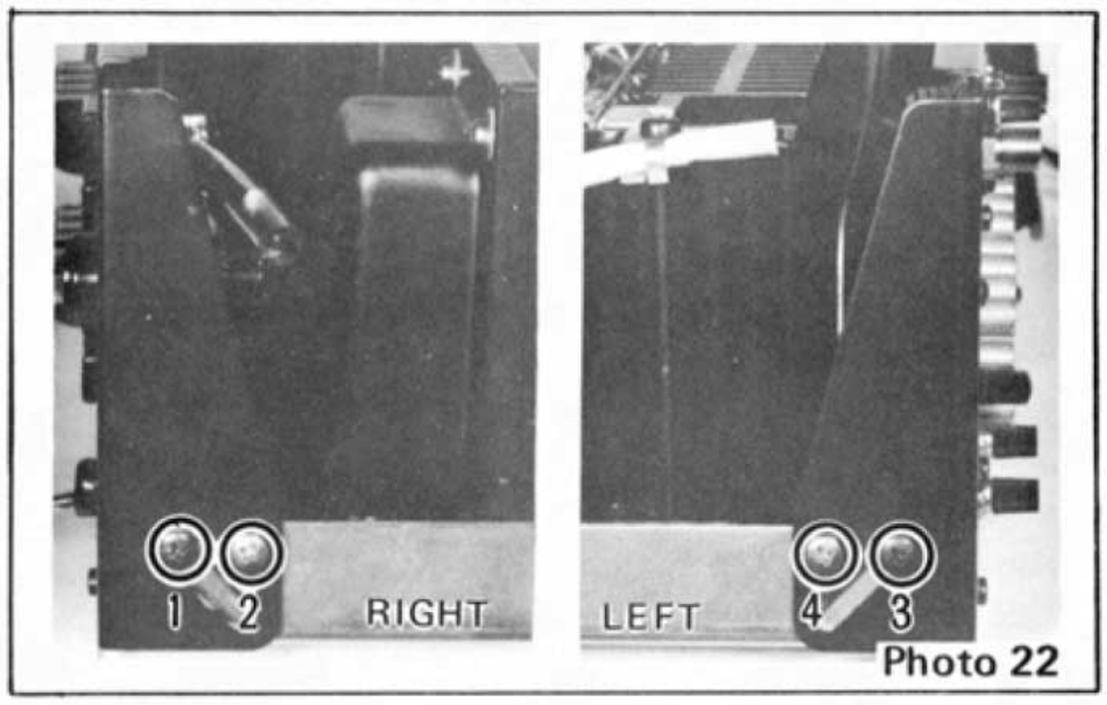

Photo 22

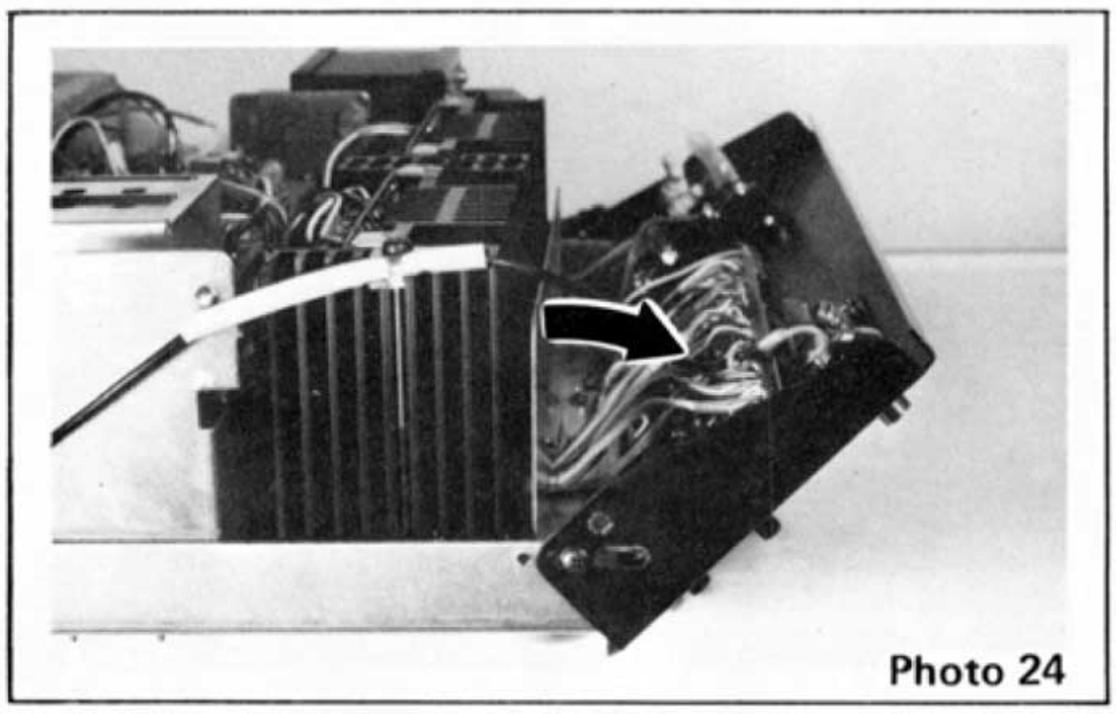
Photo 24

REAR PANEL CRICUIT BOARD REMOVAL

Remove screws 1~9 shown in Photo 25, then remove the board (drop the rear panel).

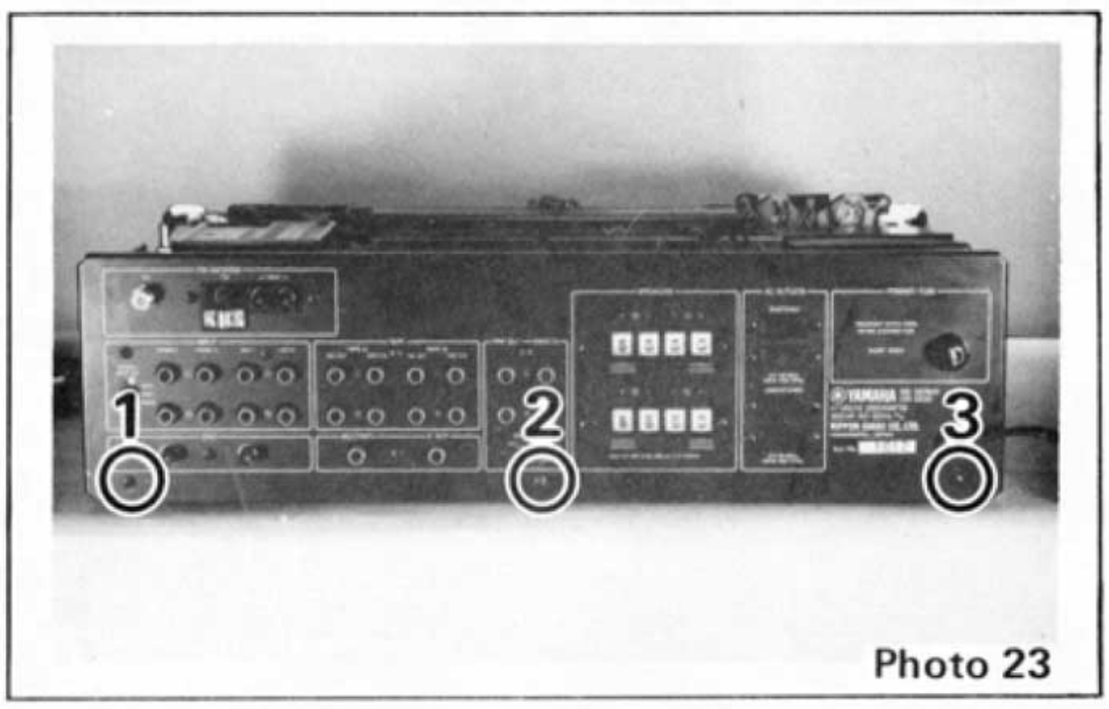

Photo 23

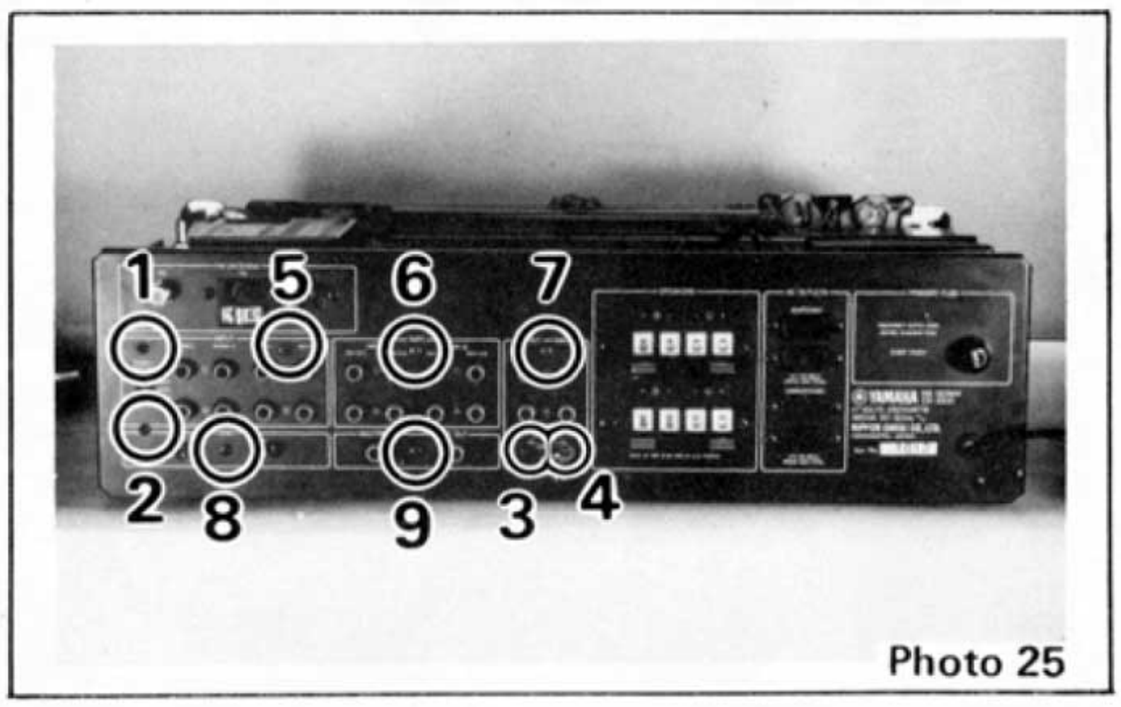

Photo 25

DIAL MECHANISM

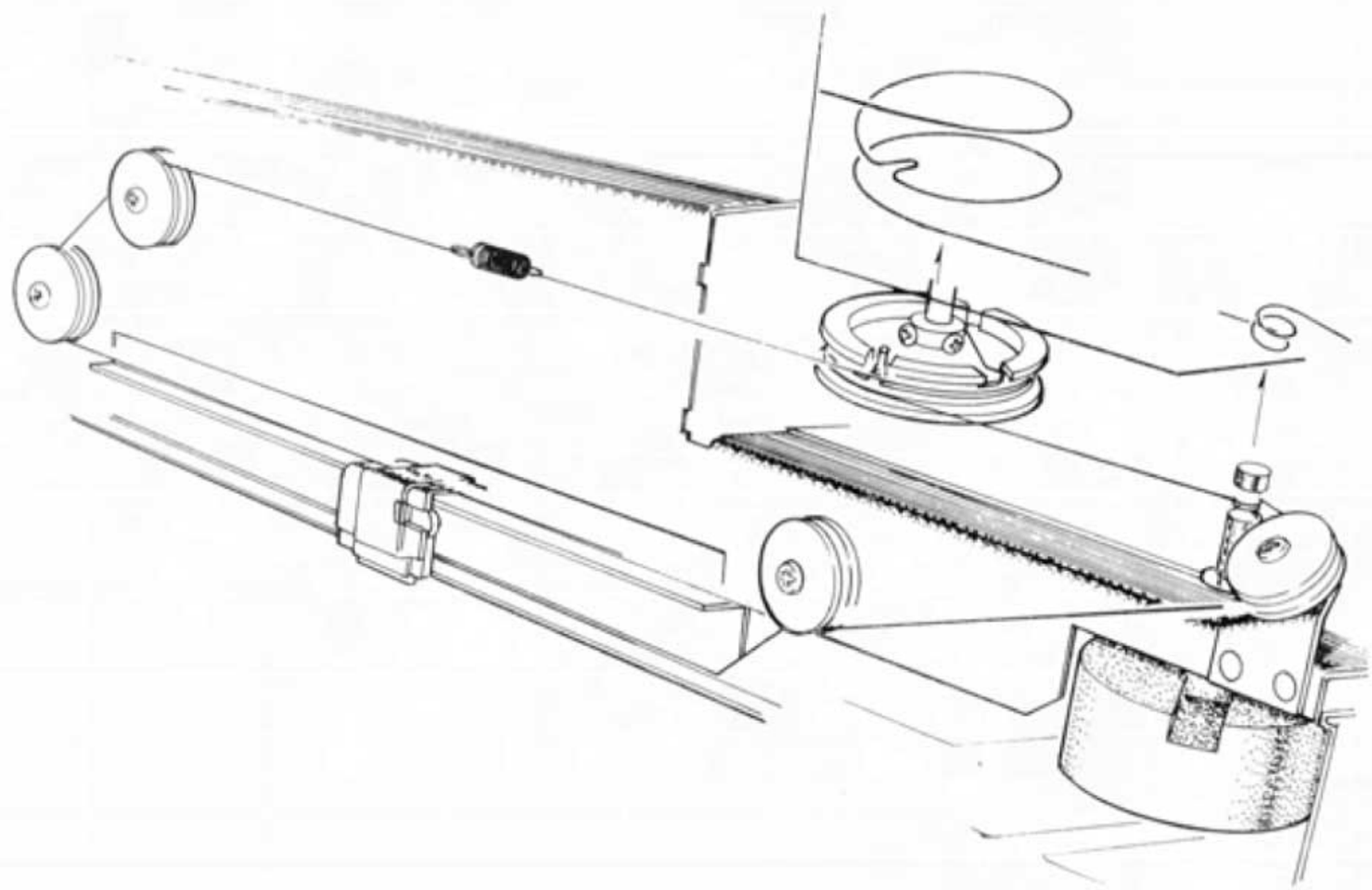

www.hifiengine.com

MEASUREMENT AND ADJUSTMENT

FM SECTION ADJUSTMENT

FM-IF ADJUSTMENT

STEP	ADJUSTMENT ITEM	TERMINALS TO BE CONNECTED & INSTRUMENTS REQUIRED	ADJUSTMENT	HOW TO ADJUST	RATING OR STANDARD	REMARKS
1	S-Curve	Input jack Sweep Generator Output: 40dB/400 ±100Ω 10-E Oscilloscope (Refer to Fig. 1.)	T101 discrim coil (Upper & Lower) core, Upper: Secondary Side Lower: Primary side	Adjust for symmetrical S-curve with the secondary-side core. Adjust for max. height with the primary-side core.	Output Voltage: more than 400mVp-p Intermediate Frequency: within 10.7-MHz±200-kHz Bandwidth: 300kHz (Refer to Fig. 2.)	

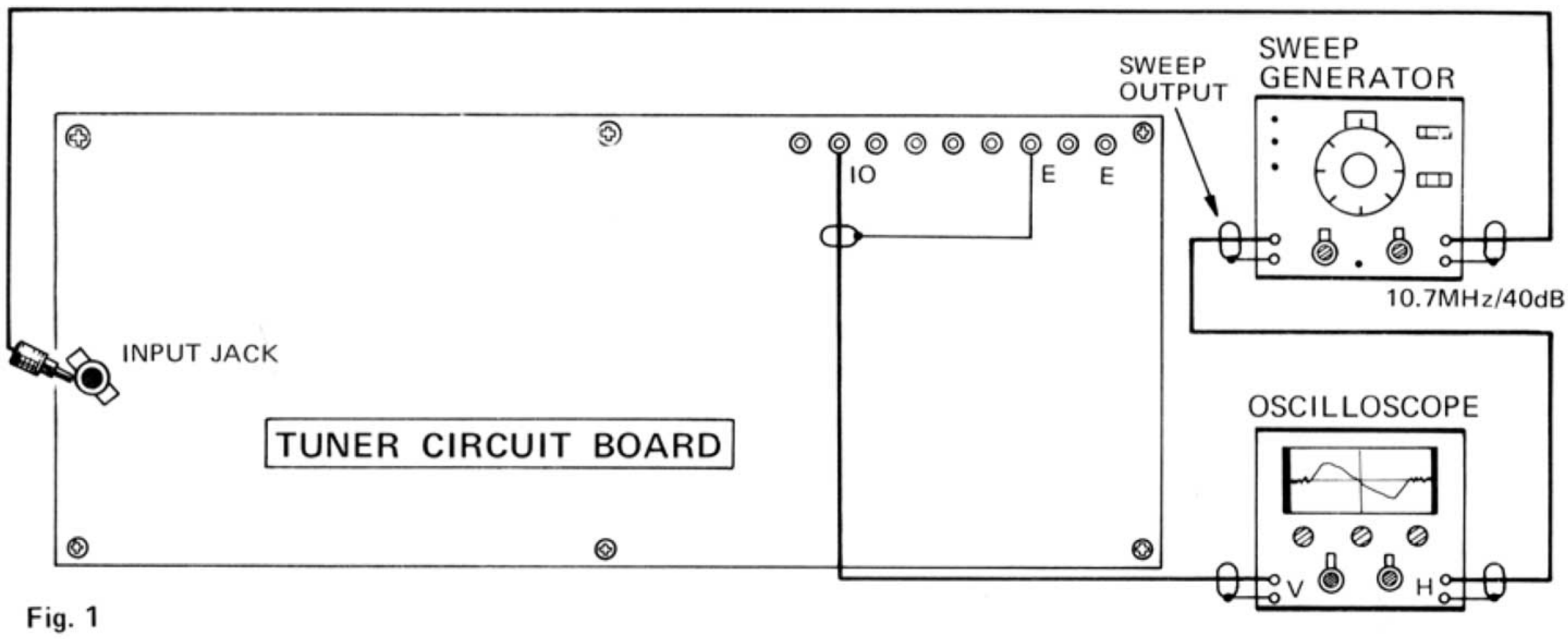

Fig. 1

Eo	OUTPUT VOLTAGE	more than 400mVp-p
fo	INTERMEDIATE FREQUENCY	10.7MHz ± 200kHz
D	BAND-WIDTH	more than 300kHz

Fig. 2

FM MPX ADJUSTMENT

STEP	ADJUSTMENT ITEM	TERMINALS TO BE CONNECTED & INSTRUMENTS REQUIRED	ADJUSTMENT	HOW TO ADJUST	RATING OR STANDARD	REMARKS
1	19kHz Filter adjustment	FM antenna terminal (300Ω) FM signal Generator 98MHz/60dBμ ● Modulate the stereo pilot signal only. Rec Out jack Oscilloscope, Distortion ratio meter, Electronic voltmeter	T105 (L) T106 (R) GE605 (Refer to Fig. 3)	Adjust for minimum 19kHz leak element. factor	Leak level: less than −60dB	Should be set at tuning point of FM TUNER COMPLETE ADJUST-MENT-"2".
2	Separation adjustment	FM antenna terminal (300Ω) FM signal Generator 98MHz/60dBμ Modulation Frequency: 400Hz/ 100% stereo (L, R & L-R) Rec Out jack Oscilloscope, Distortion ratio meter, Electronic voltmeter.	VR103 (L) VR104 (R) B22kΩ (Refer to Fig. 3)	Adjust for maximum separation (obtain this maximum by repeated left and right adjust-ments).	Separation: more than − 2dB Standard Value: −50dB	Should be set at tuning point of FM TUNER COMPLETE ADJUST-MENT -"2"

FM TUNER COMPLETE ADJUSTMENT

1	Discrim Balance		T101 discrim coil:Secondary Side(upper) Refer to Fig. 3.	Adjust for tuning meter position at 0 with out of tune noise.	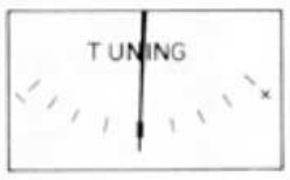	Do not con-nect anything to the FM antenna terminal
2	Tuning Point Set	FM antenna terminal (300Ω) FM signal Generator 98MHz/60dBμ Frequency: 400Hz/100% mono	Tuning knob	Center tuning meter at 0 by tuning.	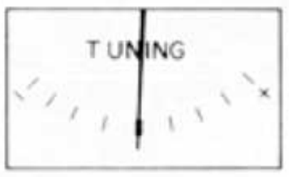	AFC OFF
3	Front-end IF tuning	FM antenna terminal (300Ω) FM signal Generator 98MHz/30dBμ or so Modulation Frequency: 400Hz/100% mono	Front-end IF core primary and secondary side. (Refer to Fig. 4)	Set for max. signal meter deflection.	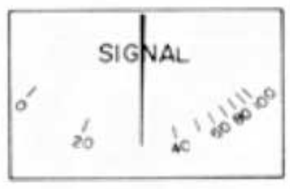	Should be set at tuning point 2.
4	Distortion adjustment (Mono)	FM antenna terminal (300Ω) FM signal Generator 98MHz/60dBμ or so Modulation Frequency: 400Hz/100% mono Rec Out jack Oscilloscope, Distortion ratio meter, Electronic volt meter.	T101 discrim coil:primary side (bottom) (Refer to Fig.)	Adjust right and left little by little until achieving lowest distortion.	Distortion: less than −50dB (0.25%) Standard Value: less than −58dB (0.12%)	Should be set at tuning point 2.

Step	ADJUSTMENT ITEM	TERMINALS TO BE CONNECTED & INSTRUMENTS REQUIRED	ADJUSTMENT	HOW TO ADJUST	RATING OR STANDARD	REMARKS
5	Distortion adjustment (Stereo)	FM antenna terminal (300Ω) FM signal Generator 98MHz/60dBμ Modulation Frequency: 400Hz /100% stereo (L, R & L-R) Rec Out jack Oscilloscope, Distortion ratio meter, Electronic volt meter.	T104(GE-6059), Front-end IF core (upper) & (lower) . (Refer to Fig. 3, 4) .	Adjust T104 for minimum distortion at maximum L-R signal. Adjust fron end IF (upper) & (lower) core via Lor R for minimum distortion.	Distortion: less than −40dB (0.4%) Standard Value: less than −54dB (0.2%)	Should be set at tuning point 2.
6	Meter adjustment	FM antenna terminal (300Ω) FM signal Generator 98MHz/100dBμ Modulation Frequency: 400Hz /100% mono	Set VR102 (semi-fixed variable resistor for meter adjustment,B10kΩ) (Refer to Fig. 3)	Set for Maximum ("100") signal meter deflection.	Allowable Error: +0mm, −1mm. 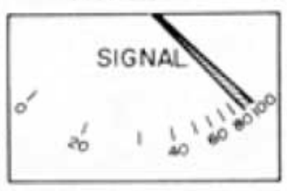	Should be set at tuning point 2.
7	Muting level adjustment	FM antenna terminal (300Ω) FM signal Generator 98MHz/20dBμ Modulation Frequency: 400Hz /100% mono Rec Out jack Oscilloscope, Electronic voltmeter	Set VR101 (semi-fixed variable resistor for muting level adjustment; B4.7kΩ) (Refer to Fig. 3)	Turn to the right little by little until output power appears.	Level where output appears: 20dBμ ±3dBμ	Should be set at tuning point 2.

FM TRACKING ADJUSTMENT

STEP	ADJUSTMENT ITEM	TERMINALS TO BE CONNECTED & INSTRUMENT REQUIRED	ADJUSTMENT	HOW TO ADJUST	RATING OR STANDARD	REMARKS
1	Dial pointer adjustment I Dial pointer adjustment II	FM antenna terminal FM signal Generator 98MHz/60dBμ	Tuning knob Dial pointer	Turn the knob and set the tuning point at TUNER COMPLETE ADJUSTMENT −"2". Set to the middle of the "98" on the gauge board.	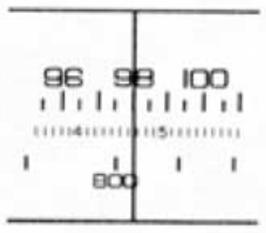	AFC-E
2	Low-band tracking conformation	FM antenna terminal FM signal Generator 90MHz/60dBμ	Tuning knob	Turn the knob and set the tuning point at 1.	Deviation should be within ±1.0-1 mm of the center of the numbers.	AFC-E, CM-E If the check shows that only one of the standards (2 and 2') are not met, adjust the needle for that measurement to within the standard.
2'	High-band tracking conformation	FM antenna terminal FM signal Generator 106MHz/60dBμ	Dial pointer	Inspect for deviation from the center of the numbers on the dial scale.		
3	Tracking adjustment I	FM antenna terminal FM signal Generator 90, 98, 106MHz/60dBμ	Tuning knob Dial pointer	Reset the dial pointer so that the greatest deviation is within the standard range.		When both 2 and 2' are out of the standard range.

www.hifiengine.com

Step	ADJUSTMENT ITEM	TERMINALS TO BE CONNECTED & INSTRUMENTS REQUIRED	ADJUSTMENT	HOW TO ADJUST	RATING OR STANDARD	REMARKS
4	Tracking adjustment II	FM antenna terminal FM signal Generator 90, 98, 106MHz/60dBμ	Tuning knob	Match the needle to the numbers.		
		FM antenna terminal FM signal Generator 88MHz/ 60dBμ	Front end L	Set the tuning point at 1. Set for maximum meter deflection.	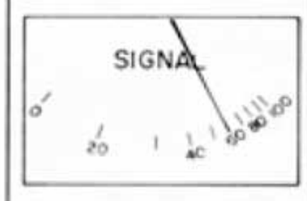	When the standard is not met even after adjustments 2, 2' and 3.
		88MHz/30dBμ	Front end RF, ANT core. (Refer to Fig. 4.)		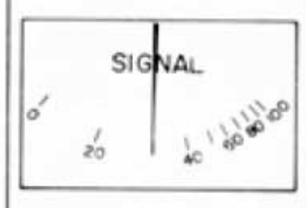	
		FM antenna terminal FM signal Generator 106MHz/60dBμ	Front end LOSC trimmer	Set the tuning point at 1. Set for maximum meter deflection.		
		106MHz/30dBμ	Front end RF, ANT trimmer (Refer to Fig. 4.)			

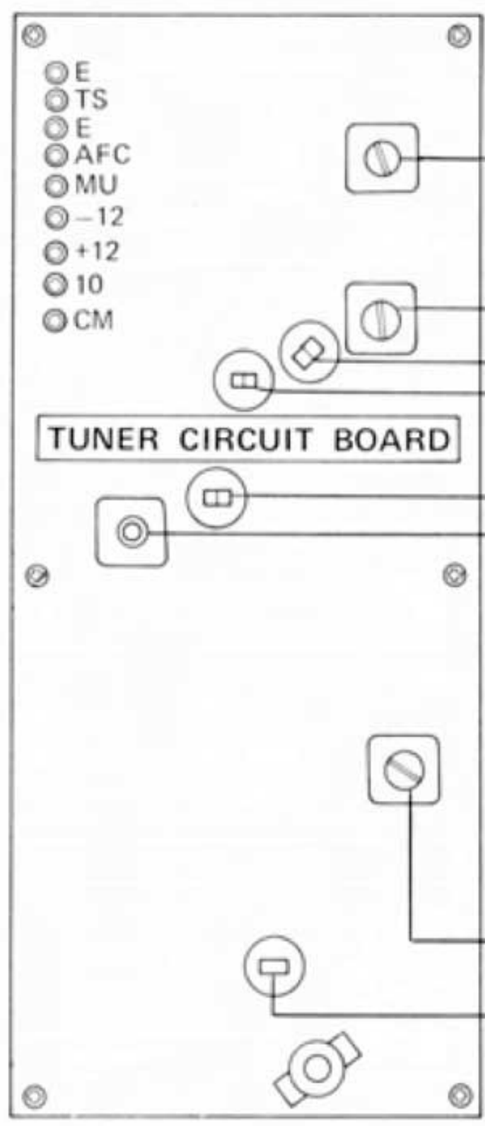

FM TUNER

	PARTS NAME	ADJUSTMENT ITEM
●	T105 (GE6057)	19kHz FILTER ADJUSTMENT T105 : L T106 : R
●	T106 (GE6057)	
●	VR103 (B22kΩ)	SEPARATION ADJUSTMENT
●	VR104 (B22kΩ)	
●	VR102 (B4.7kΩ)	MUTING LEVEL ADJUSTMENT
●	T101 (GE6025) :SOUTH AFRICAN MODEL ONLY (GE6019) :EXCEPT SOUTH AFRICAN MODEL	• S-CURVE • DISCRIM BALANCE (TP CORE ONLY) • DISTORTION ADJUSTMENT (BOTTOM CORE ONLY)
●	T104 (GE6059)	DISTORTION ADJUSTMENT
●	VR101 (B10kΩ)	METER ADJUSTMENT

Fig. 3

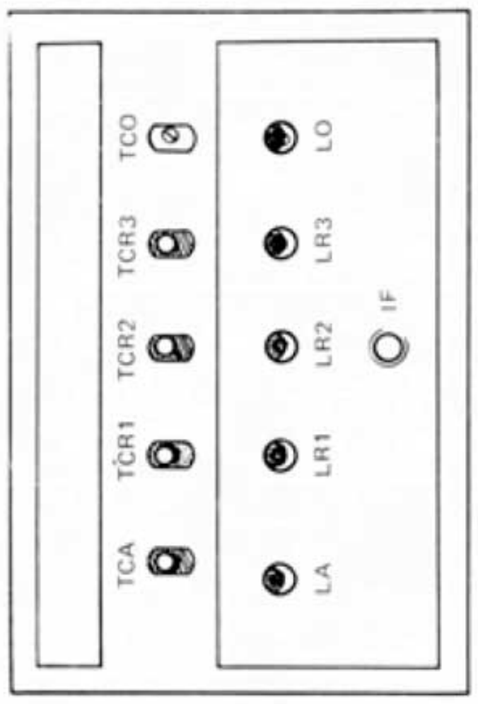

FRONT END

CORE	TRIMMER	ADJUSTMENT ITEM
IF		• FRONT END IF TUNING • DISTORTION ADJUSTMENT
L0 LR2 LR1 LA	TCO TCR2 TCR1 TCA	• SENSITIVITY ADJUSTMENT • TRACKING ADJUSTMENT

Fig. 4

www.hifiengine.com

MAIN AMPLIFIER ADJUSTMENT

BEFORE ADJUSTMENT

- Turn the Pre/Main coupler switch Off.
- After the power switch us turned in, wait 1 minute before adjustment, to be sure of themost stable operation.
- Do not connect speakers or dummy load resistor to the speaker terminals.

STEP	ADJUSTMENT ITEM	TERMINALS TO BE CONNECTED & INSTRUMENT REQUIRED	ADJUSTMENT	HOW TO ADJUST	RATING OR STANDARD	REMARKS
1	Primary stage differential amplification circuit current adjustment	TP1 (–) — TP2 (+) Refer to Fig.8. Electronic voltmeter	VR602 Refer to Fig.8.	Set the voltage between TP1 and TP2 to rating value (15V ±0.15V) with VR602.	15V ±0.15V	
2	Mid-point voltage adjustment	OUT — E Refer to Fig.8. Electronic voltmeter.	VR601 Refer to Fig 8.	Set the voltage between OUT and E to rating value (0V ±0.01V) with VR601.	0V ±0.01V	
3	Idling current adjustment	TP3 (+) — TP4 (–) Refer to Fig.8. Electronic voltmeter.	VR603 Refer to Fig. 8.	Set the voltage between TP3 and TP4 to rating value (0.047V ±0.01V)	0.047V ± ±0.01V	
4		Repeat steps 1 ~ 3 several times.				

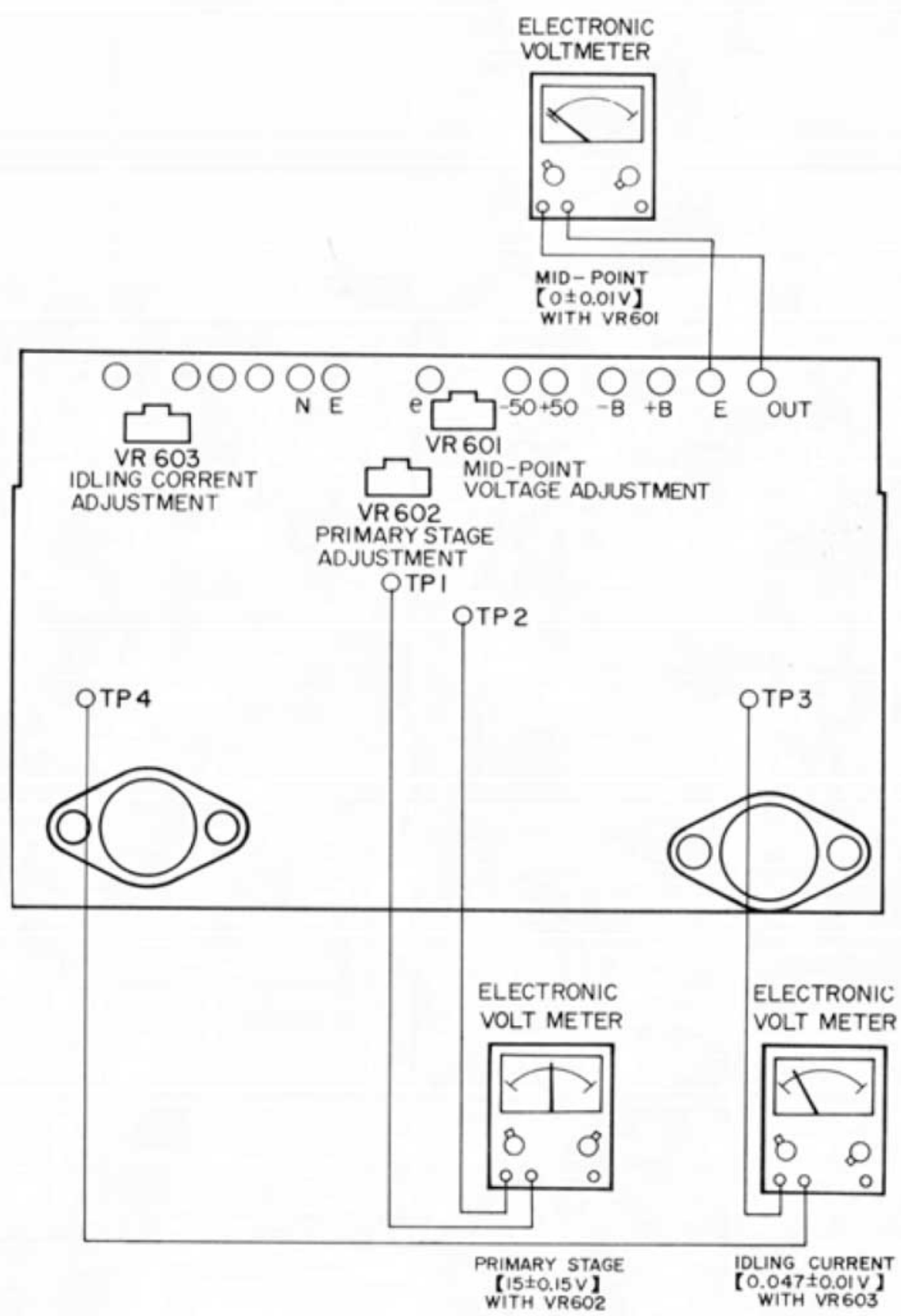

Fig. 8

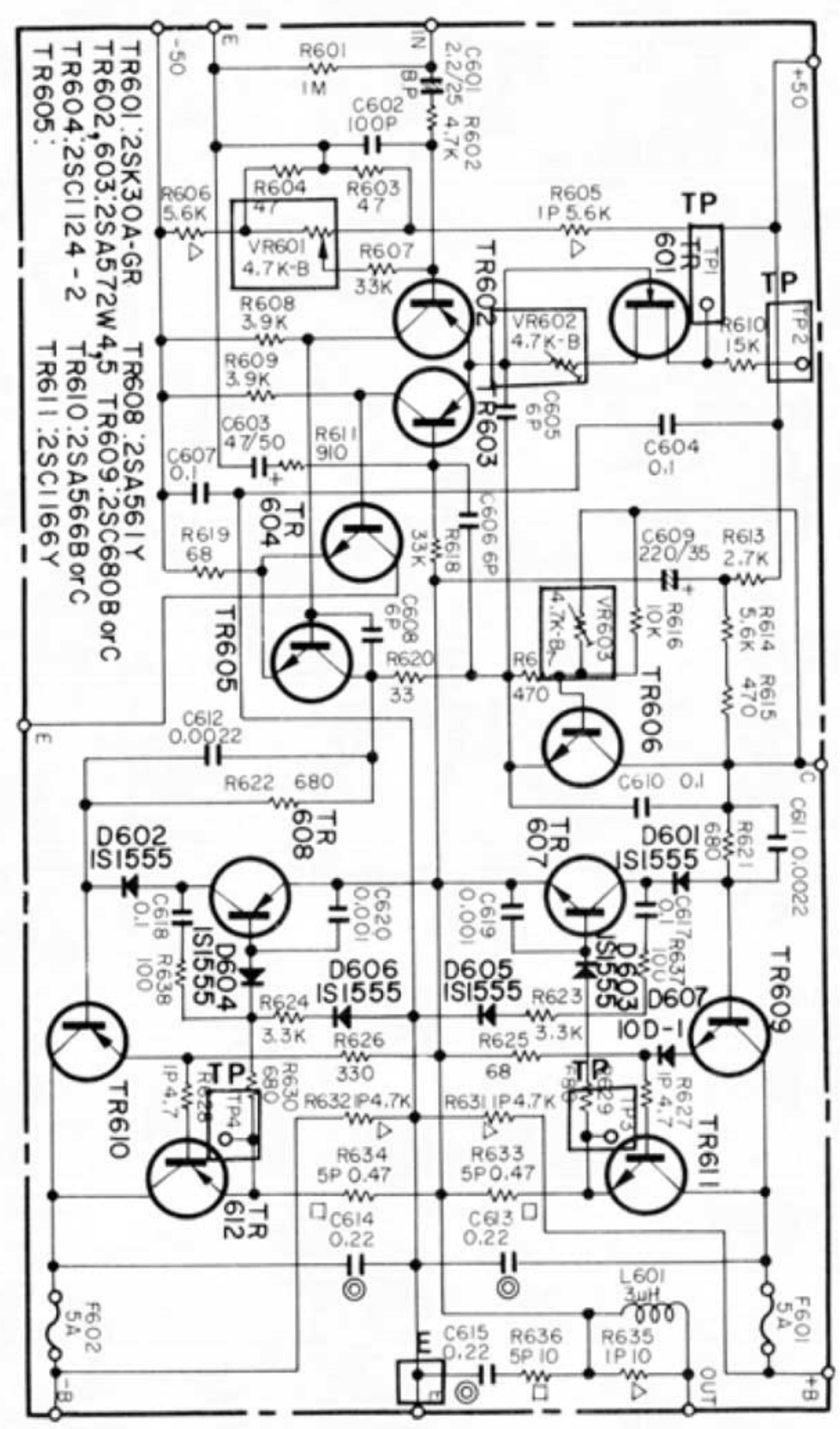

Fig. 9

EQ AMPLIFIER ADJUSTMENT

STEP	ADJUSTMENT ITEM	TERMINALS TO BE CONNECTED & INSTRUMENT REQUIRED	ADJUSTMENT	HOW TO ADJUST	RATING OR STANDARD	REMARKS
1	SEPP Output mid-point voltage adjustment	TP1 — E (L) TP2 — E (R) Refer to Fig.5 Electronic voltmeter	VR401 (L) VR402 (R) Refer to Fig.5	Set the voltage between TP1 and E, TP2 and E to rating value (28.0V ±0.5V) with VR401, VR402.	28.0V ±0.5V	
2	Bias adjustment	PHONO 1 or 2 jack Oscillator 1kHz/240mV REC OUT JACK Distortion ratio meter Electronic voltmeter Oscilloscope	VR401 (L) VR402 (R) Refer to Fig.6	Set VR401 and VR402 for lowest possible distortion within the limits set by the Step 1 adjustment of the SEPP output voltage (28.0V ±0.5V).		

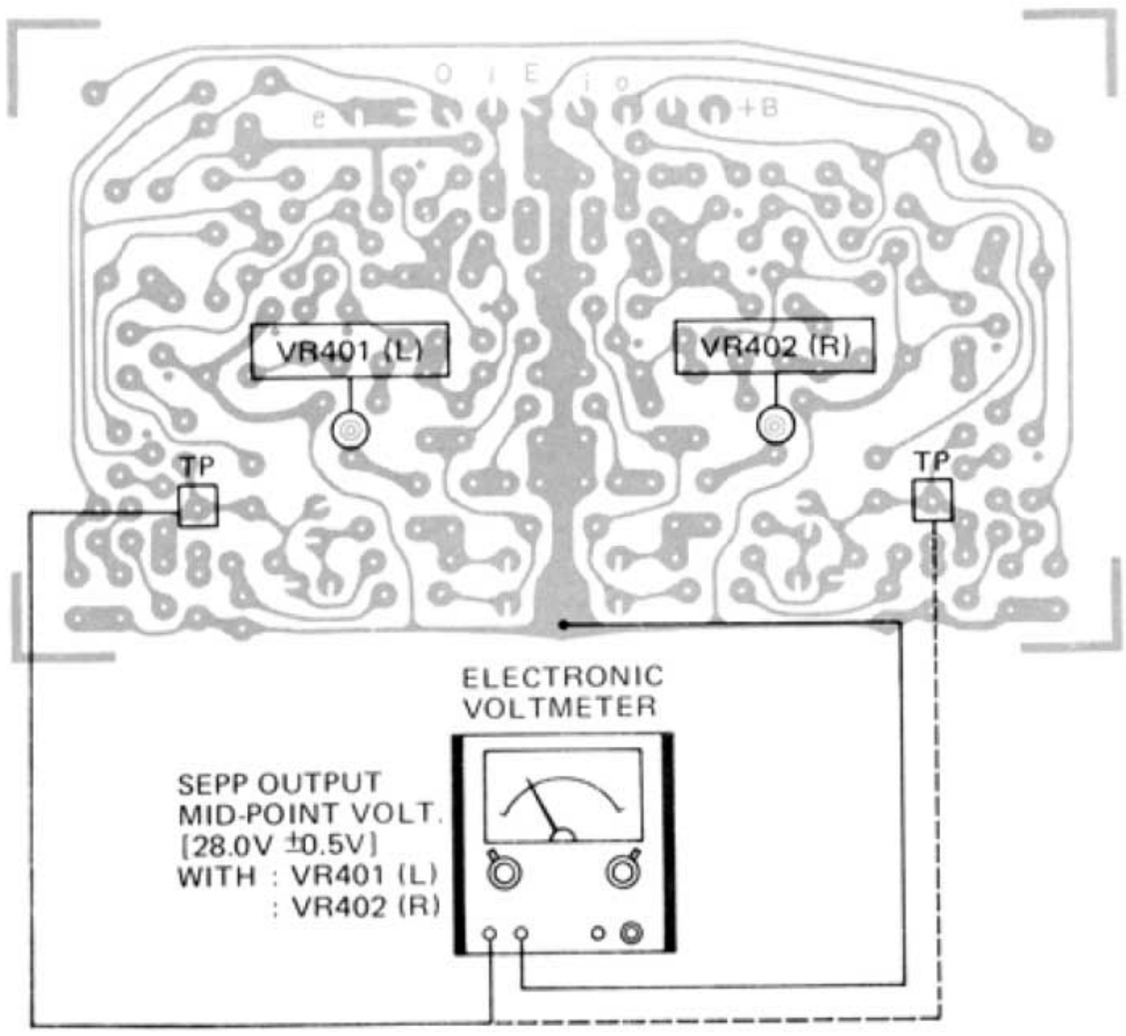

Fig. 5

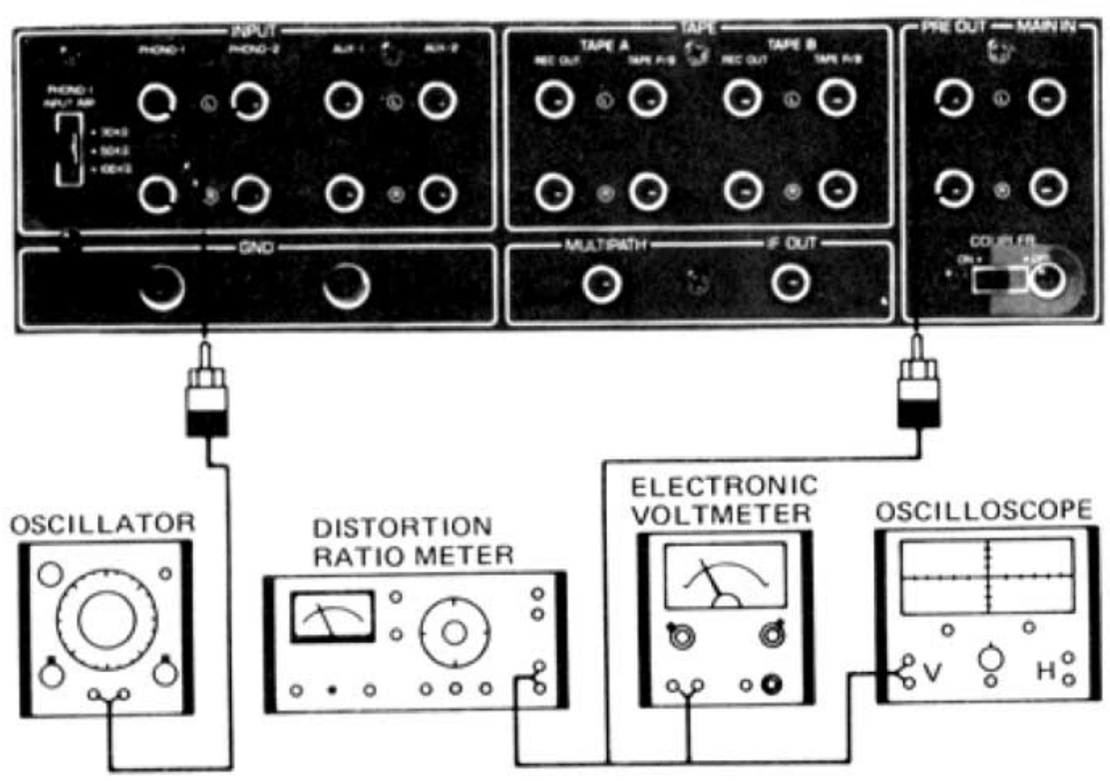

Fig. 6

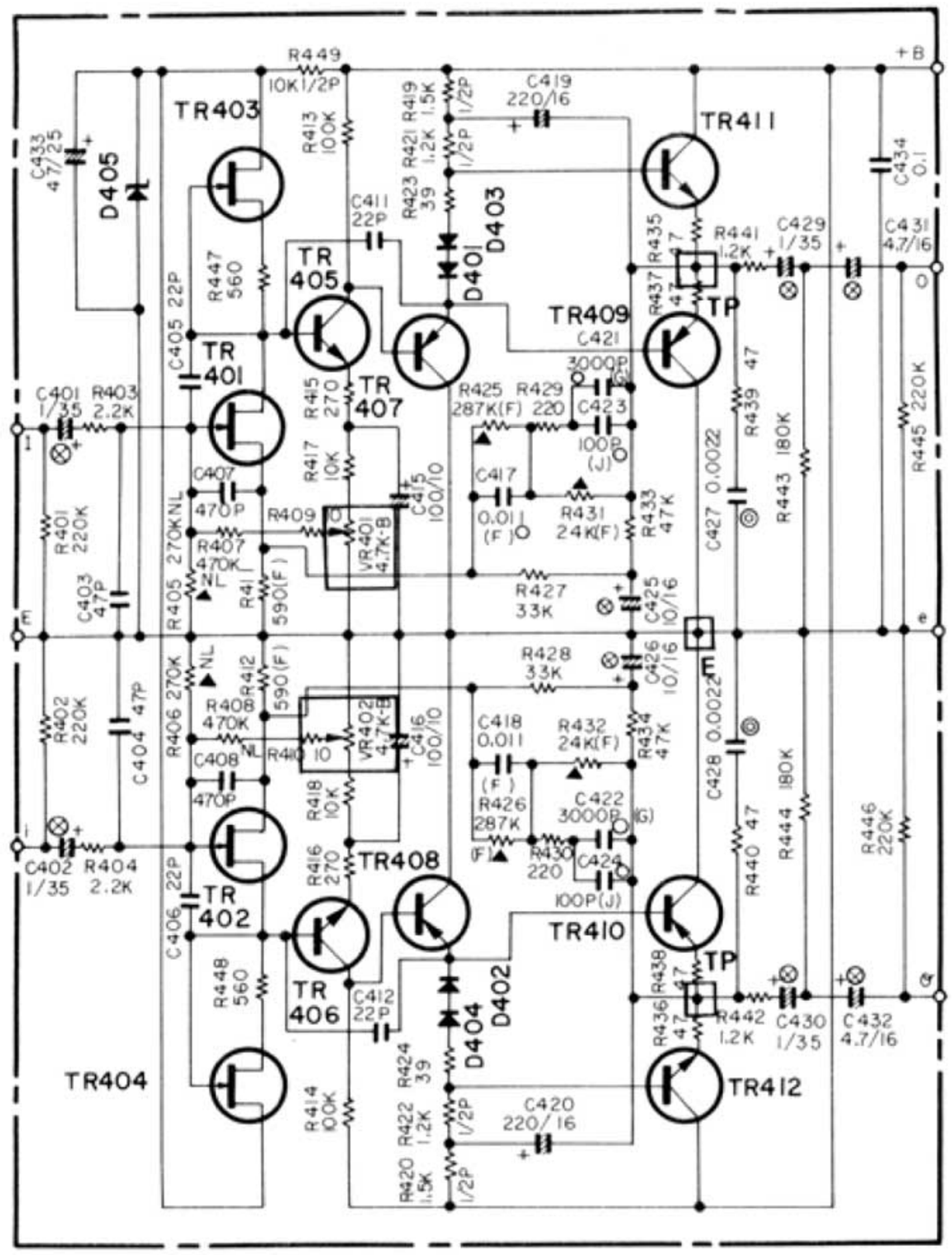

Fig. 7

PRINTED CIRCUIT BOARD

TUNER CIRCUIT BOARD NA06372 : SOUTH AFRICAN MODEL
NA06405 : U.S.& CANADIAN MODELS
NA06406 : EUROPEAN, AUSTRALIAN & GENERAL MODELS

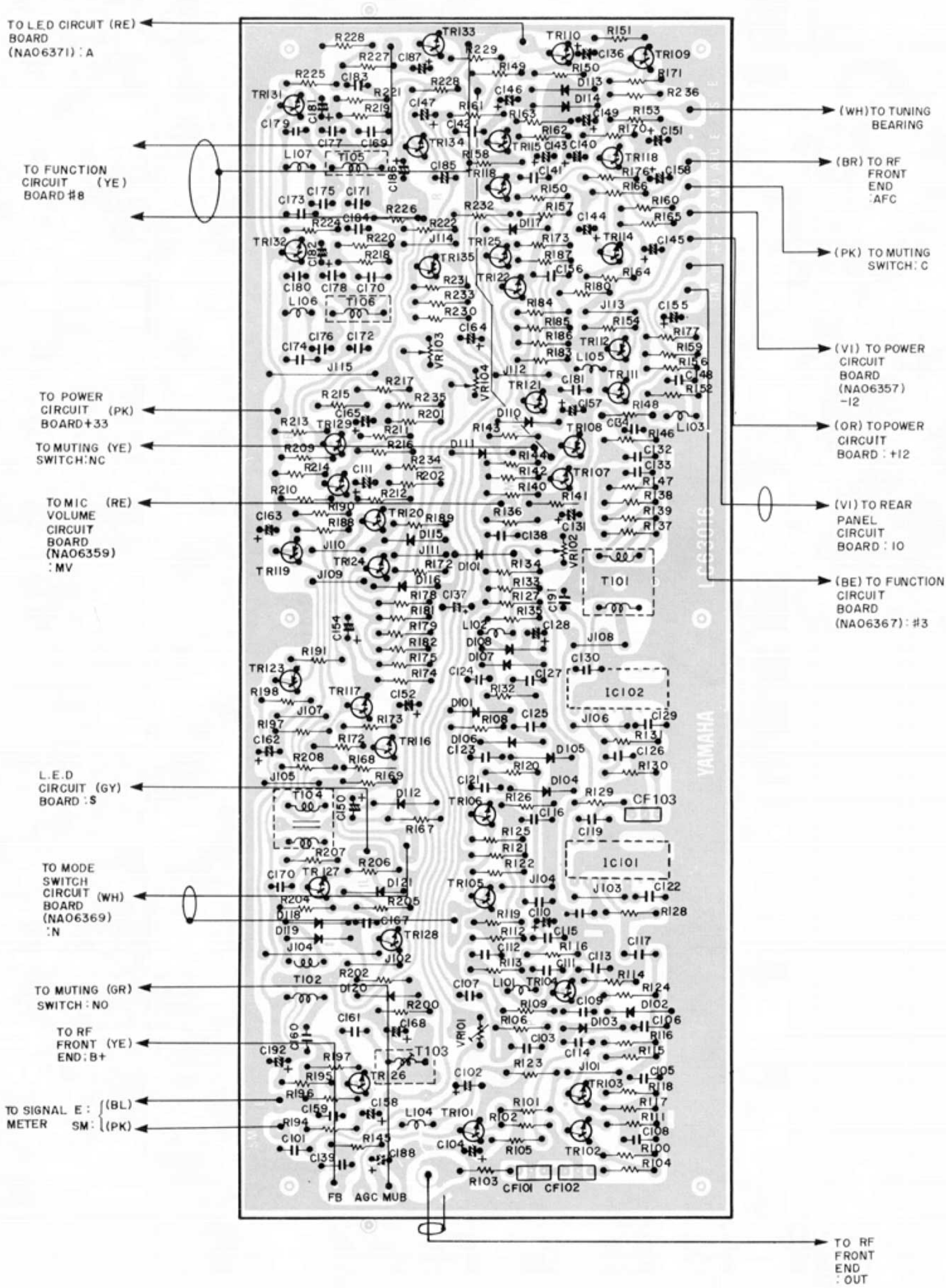

EQUALIZER AMP CIRCUIT BOARD NA06368

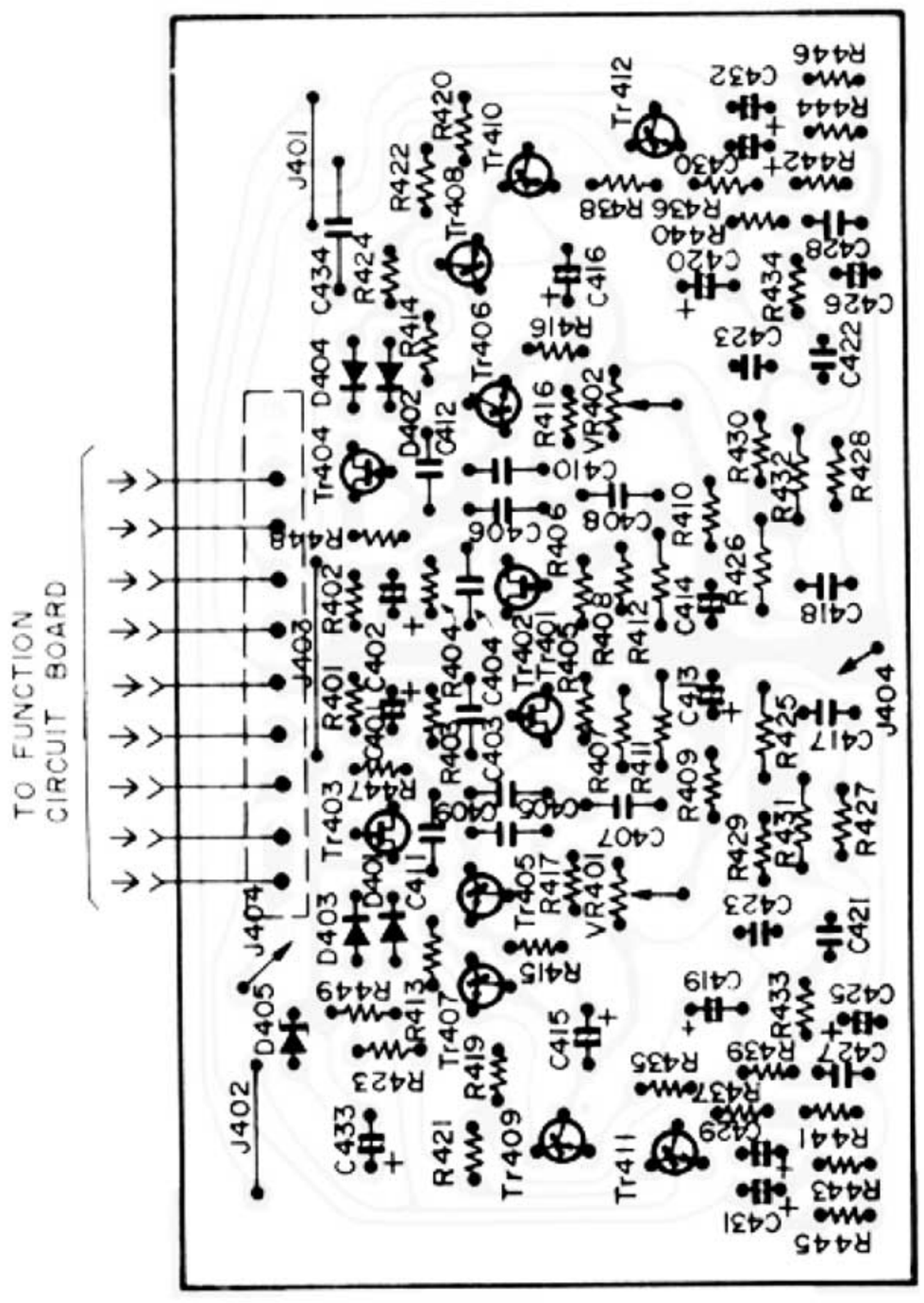

TAPE MONITOR SWITCH CIRCUIT BOARD NA06370

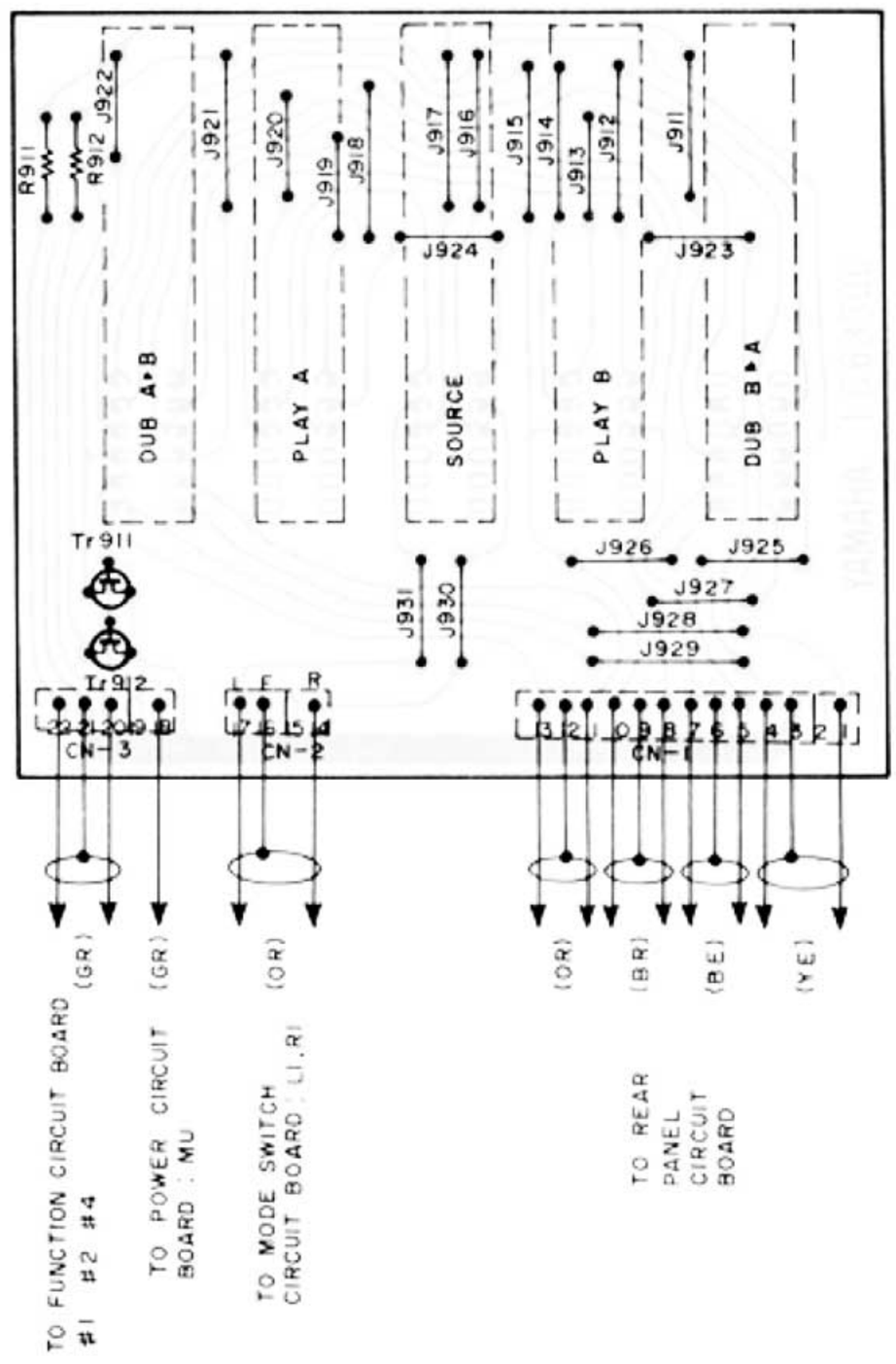

FUNCTION SWITCH CIRCUIT BOARD NA06367

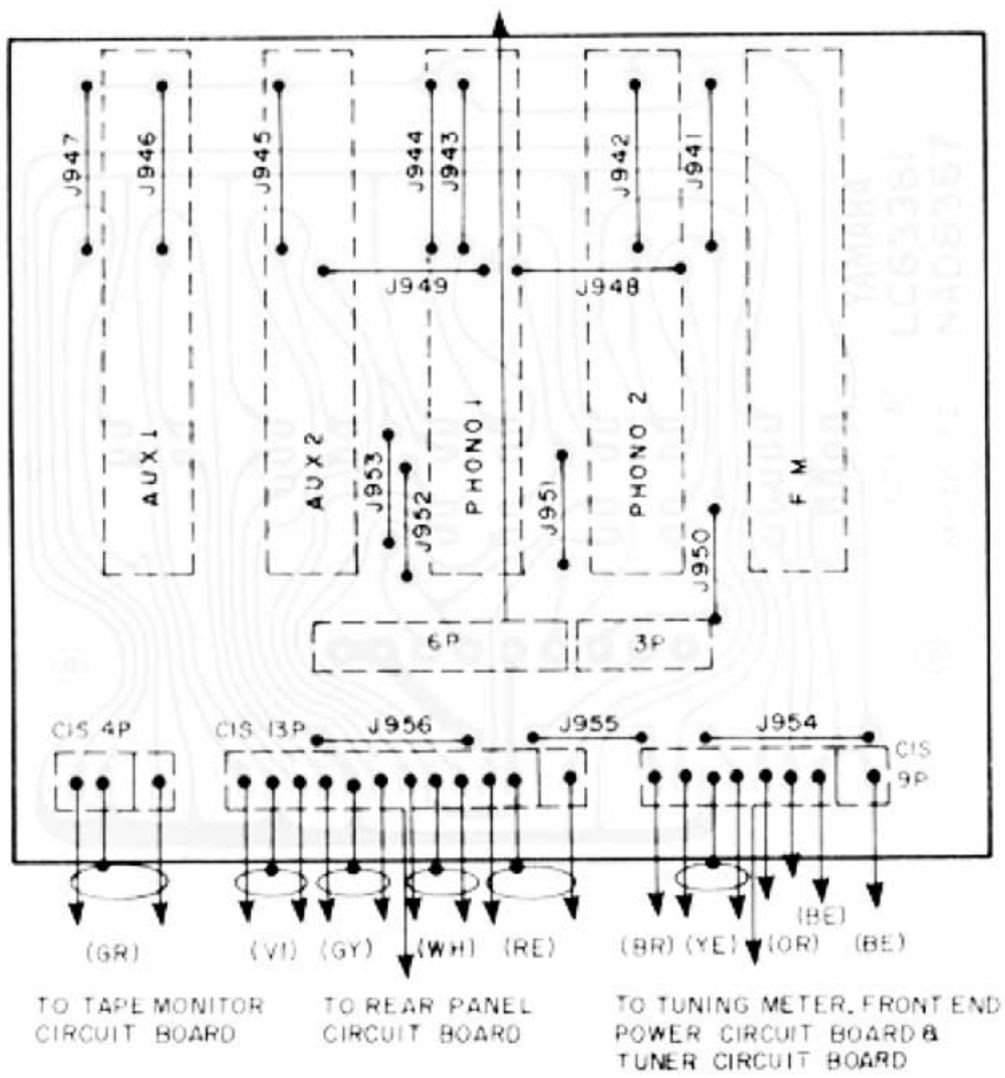

MODE SWITCH CIRCUIT BOARD NA06369

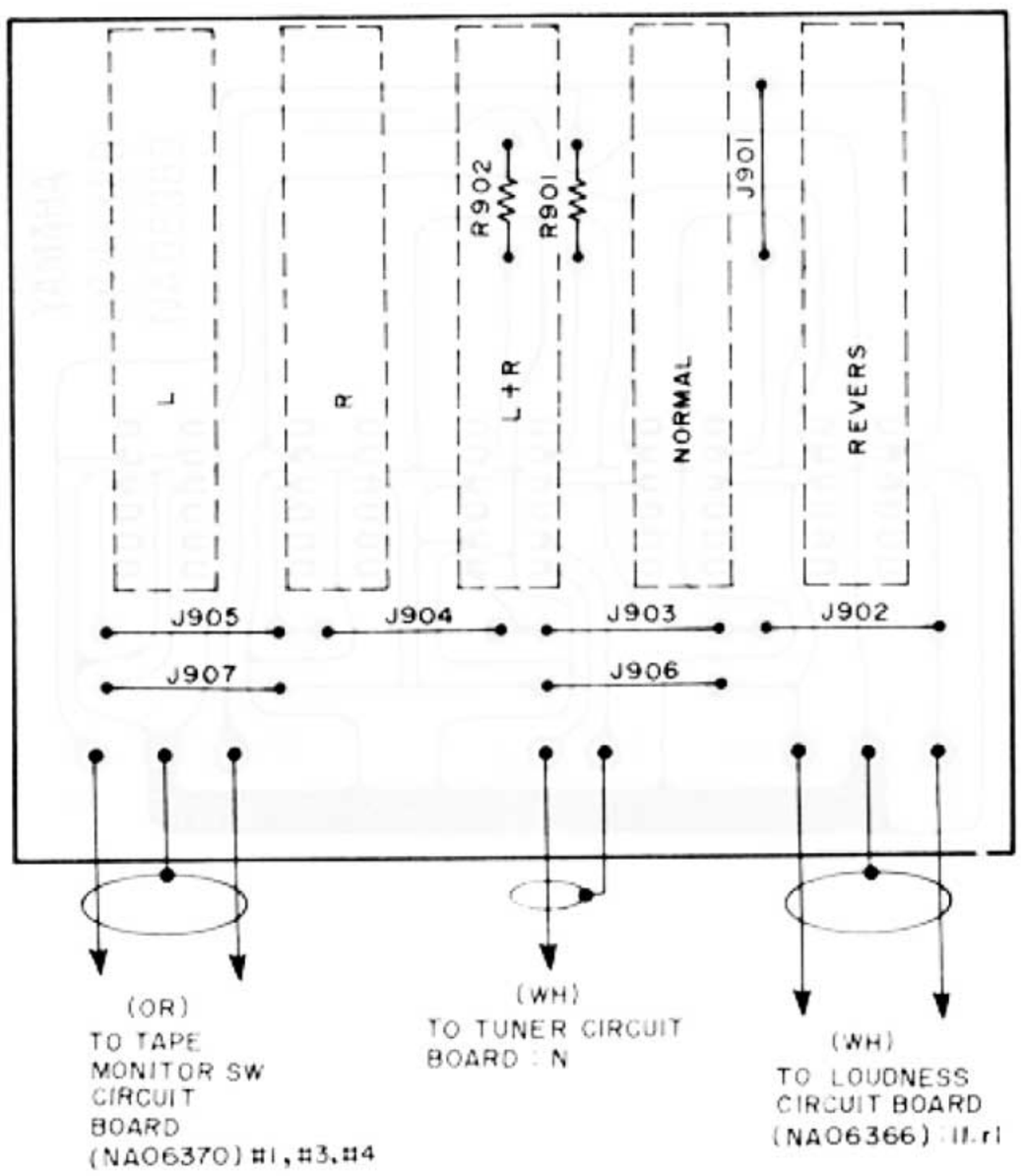

TONE CENTROL AMP CIRCUIT BOARD NA06365

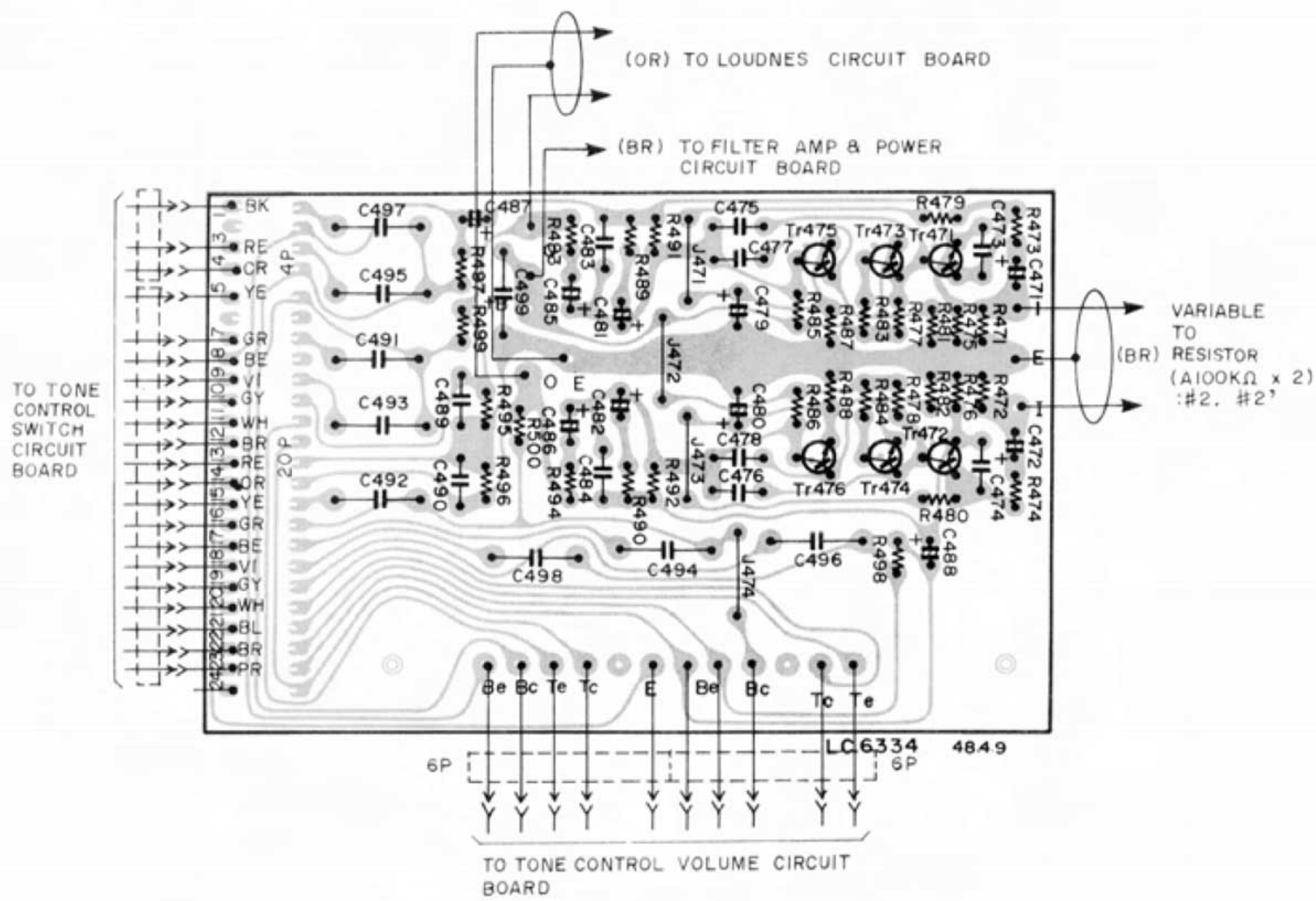

TONE CONTROL VOLUME CIRCUIT BOARD NA06364

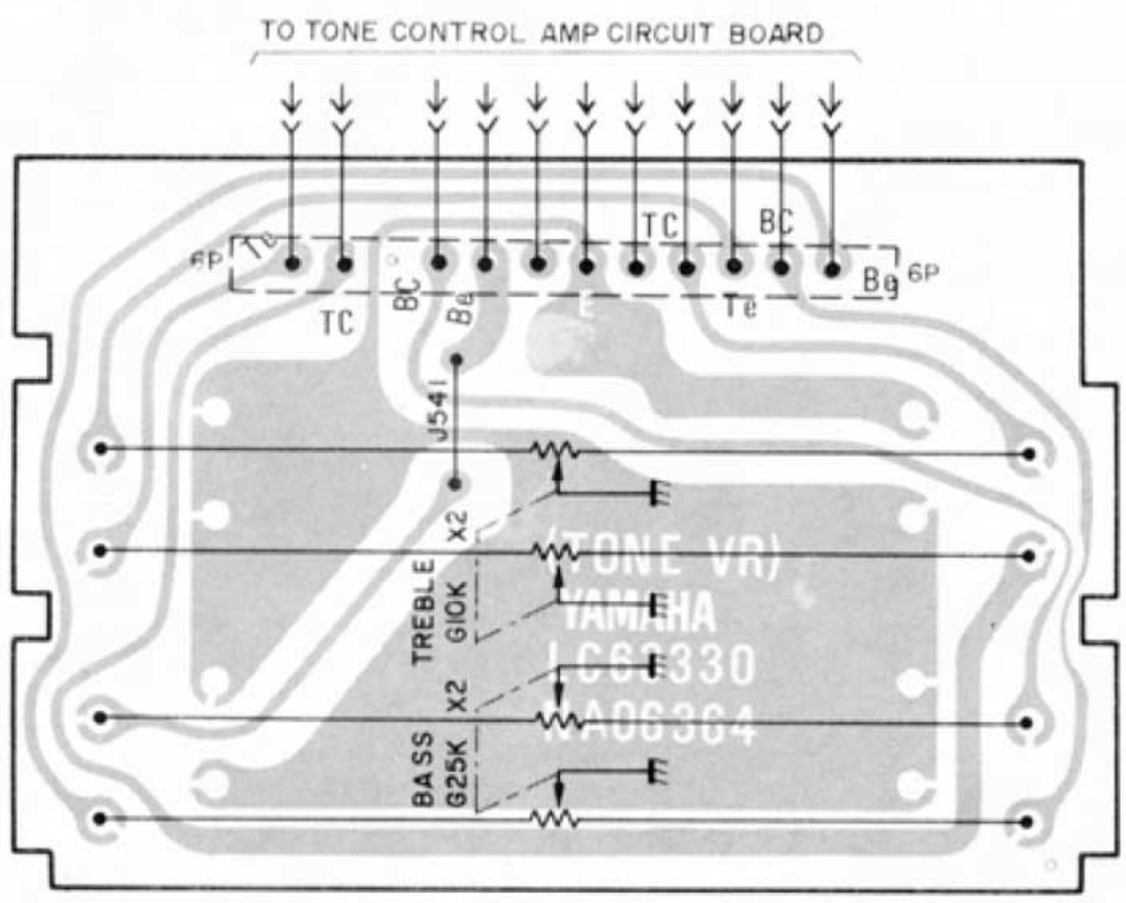

TONE CONTROL SWITCH CIRCUIT BOARD NA06363

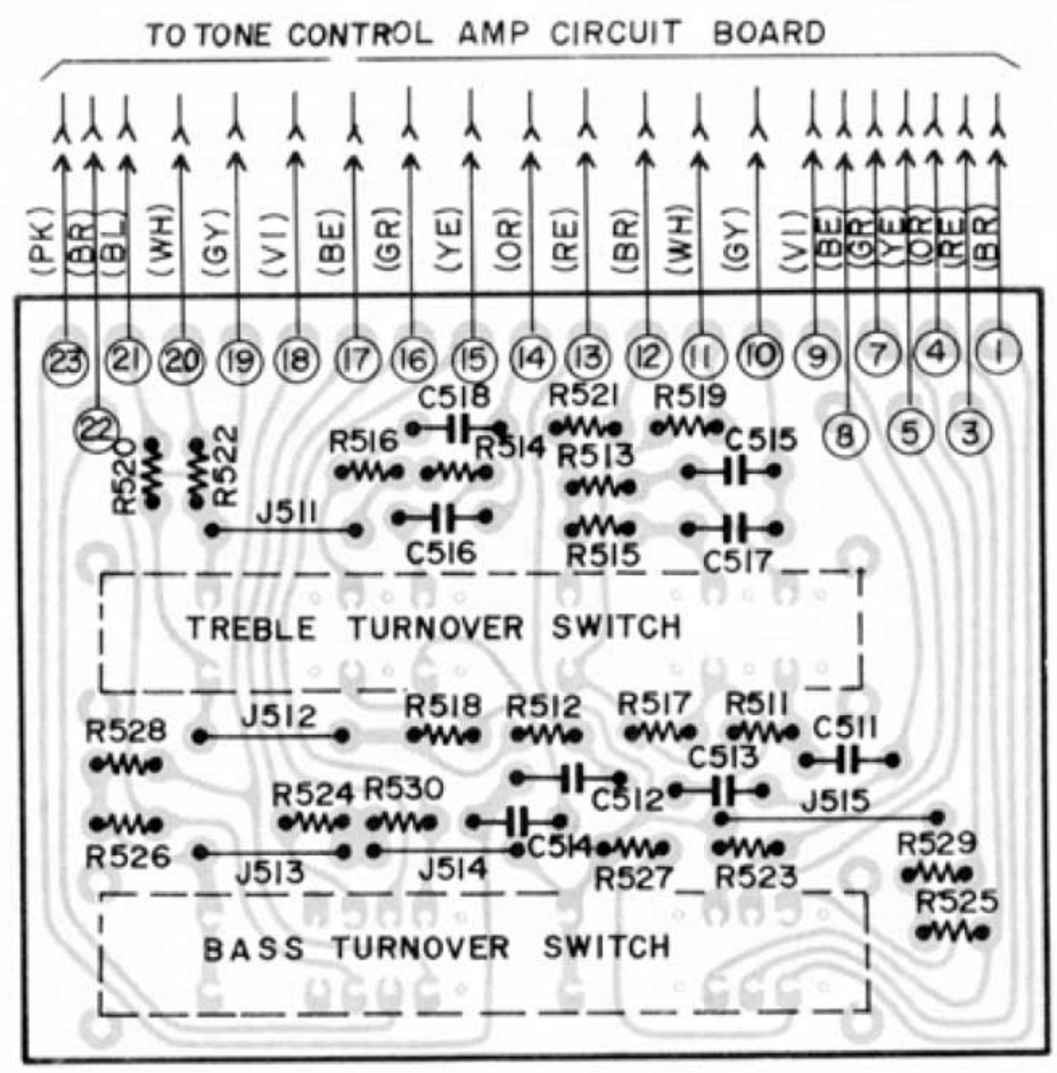

FILTER AMM CIRCUIT BOARD NA06362

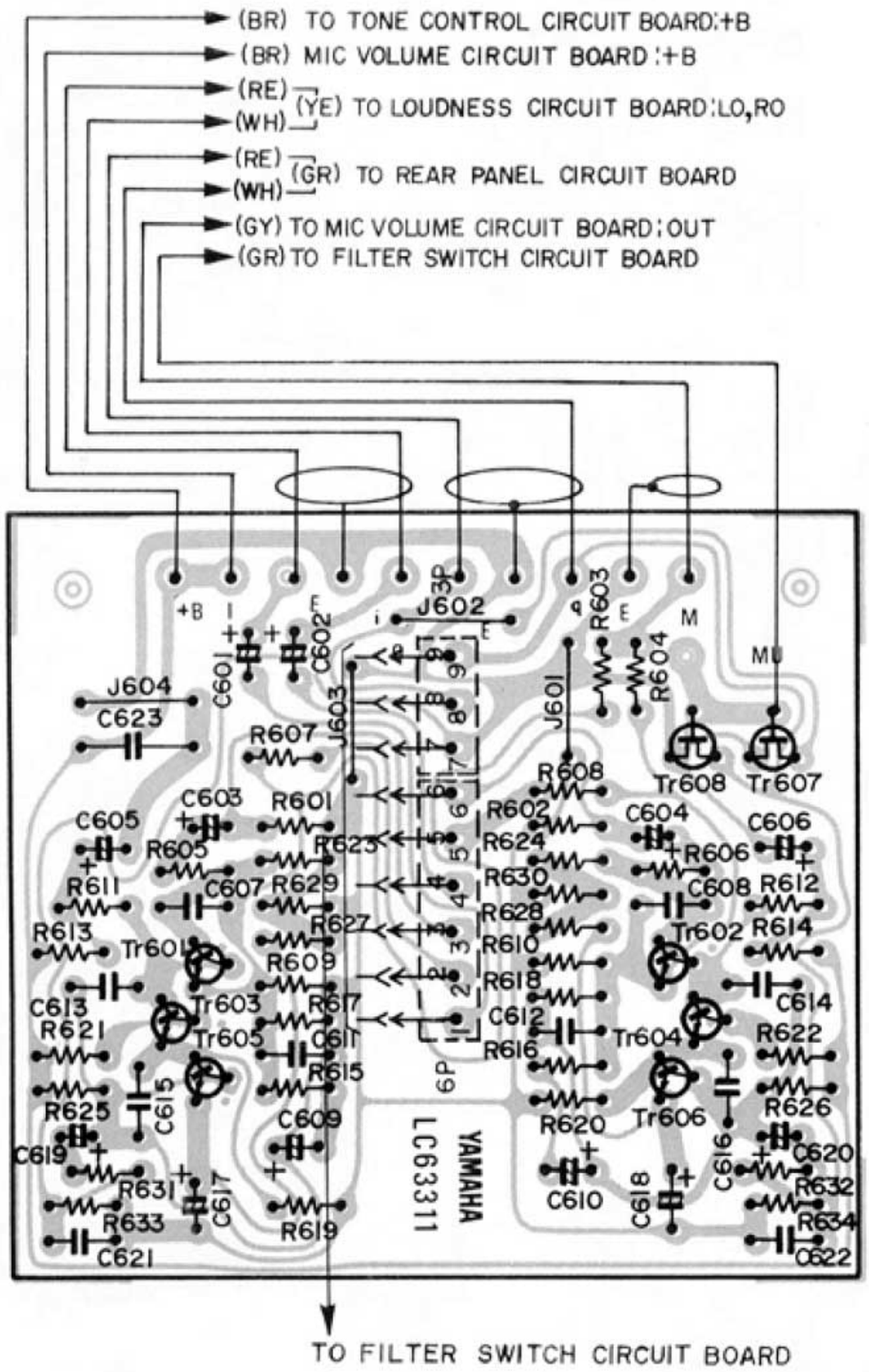

LOUDNESS CONTROL CIRCUIT BOARD NA06366

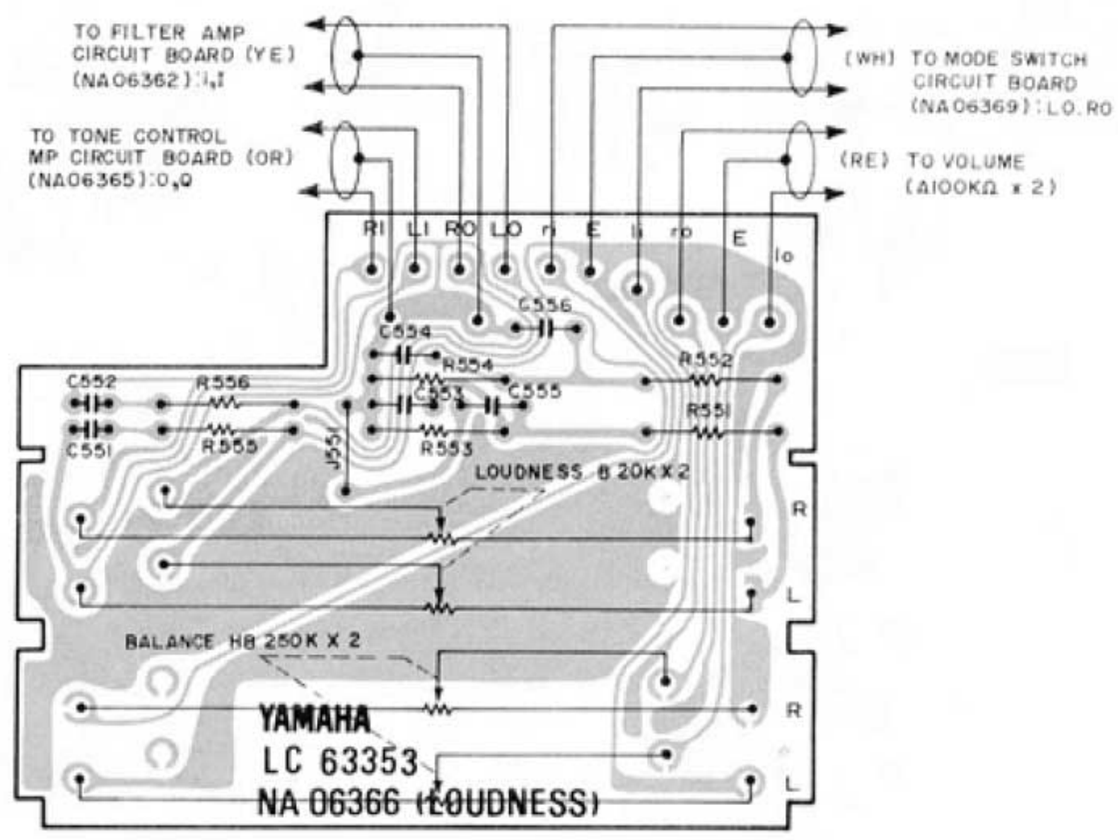

FILTER SWITCH CIRCUIT BOARD NA06361

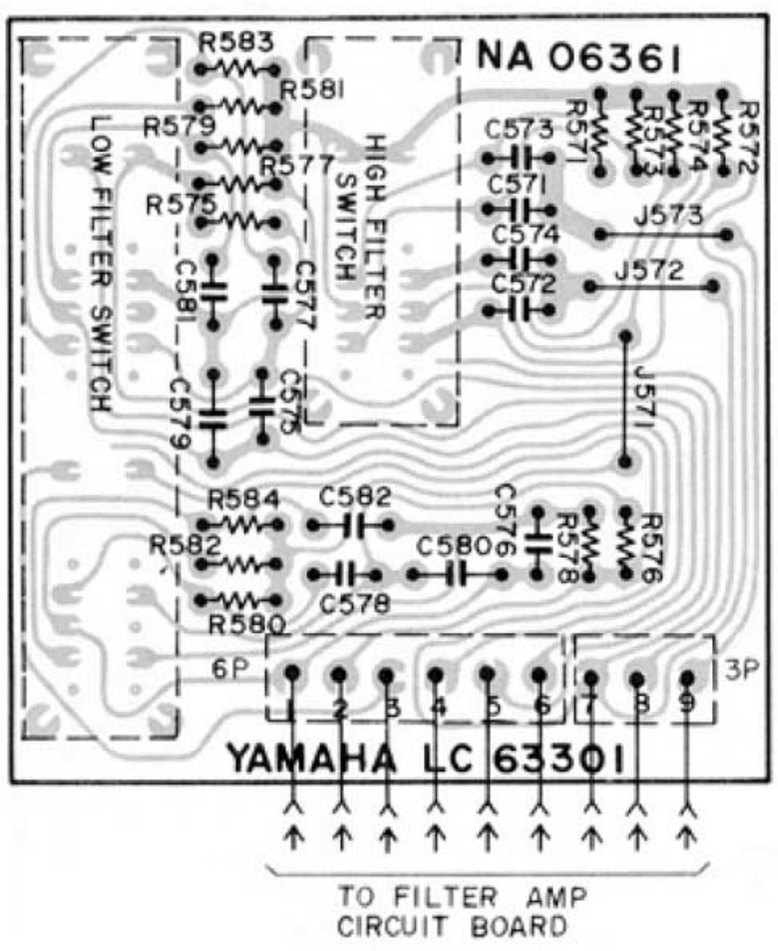

MIC AMP CIRCUIT BOARD NA06360

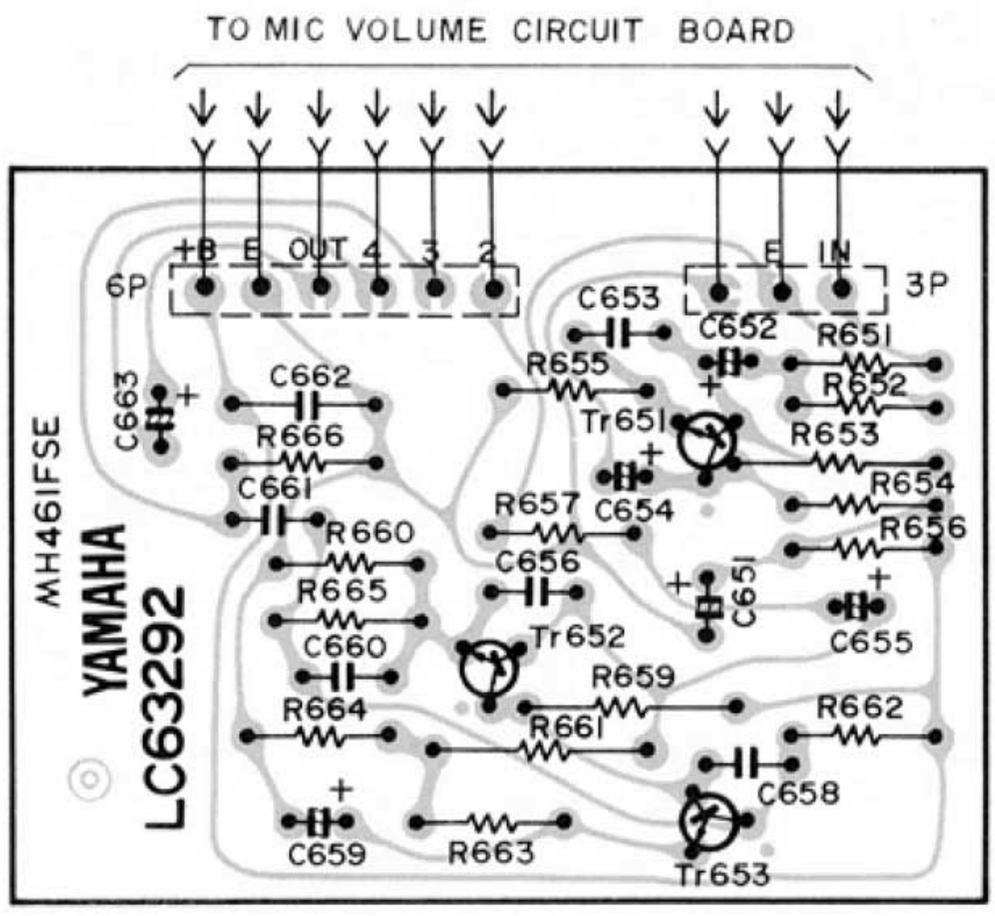

MIC VOLUME CIRCUIT BOARD NA06359

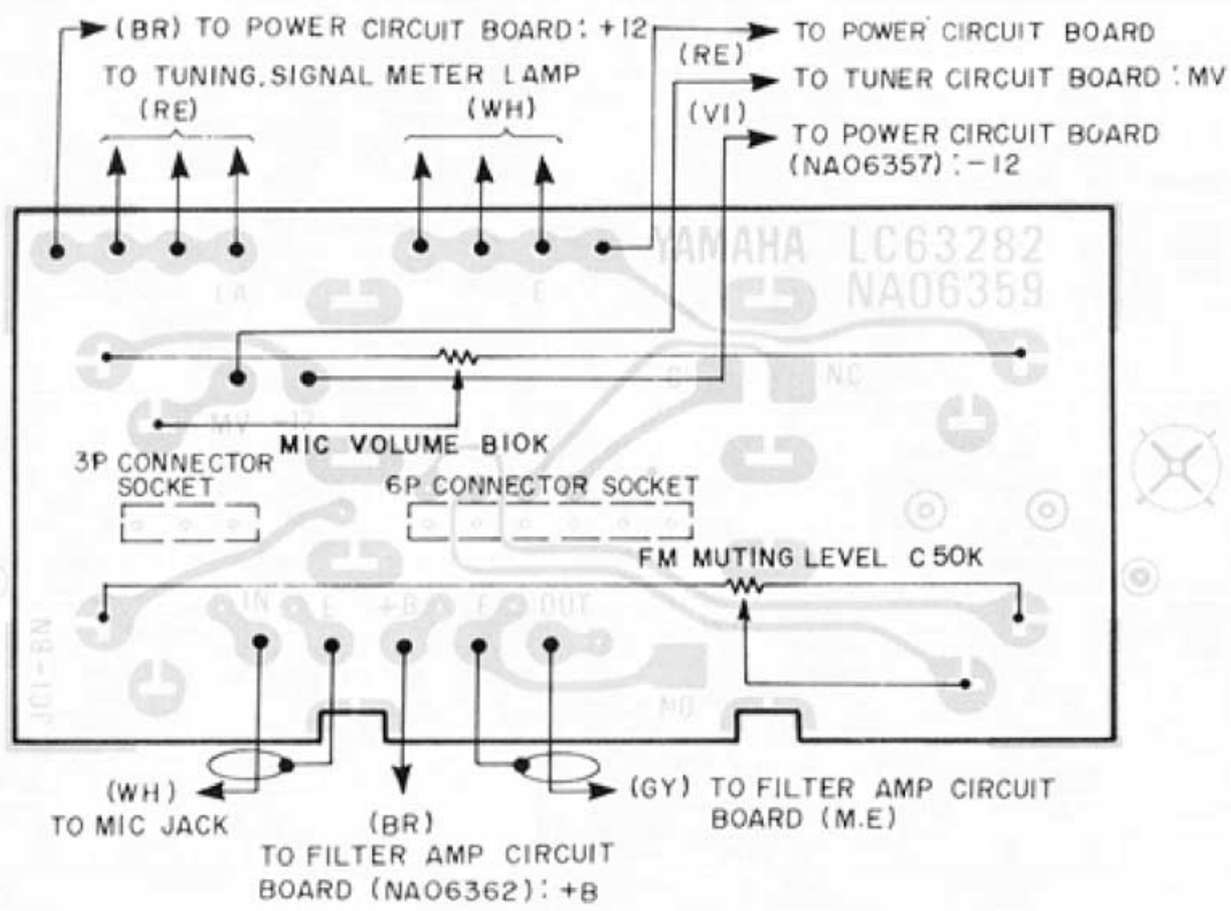

LIGHT EMITTING DIODE CIRCUIT BOARD NA06371

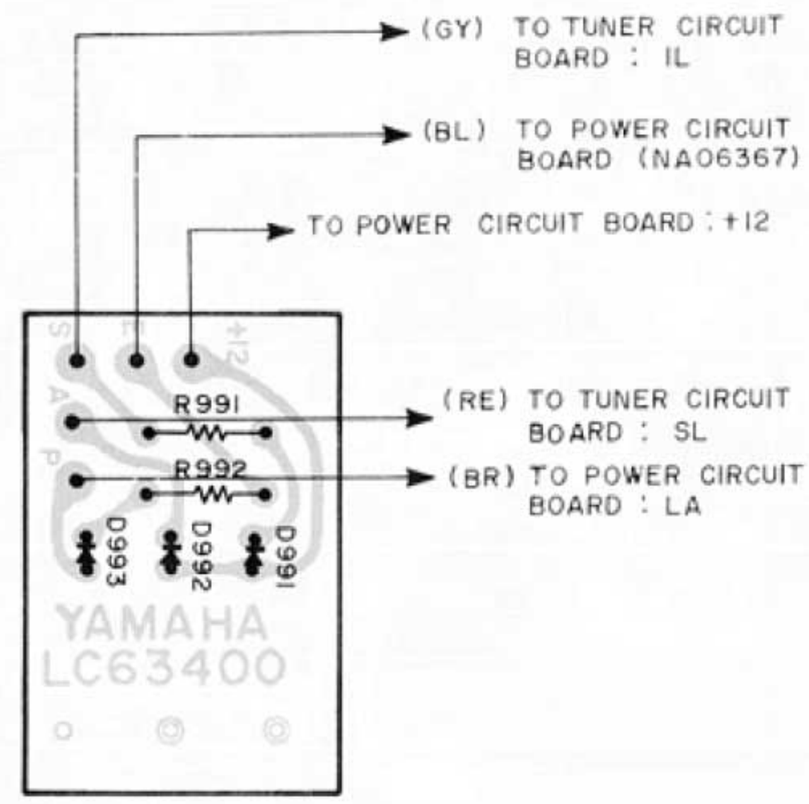

MAIN AMP CIRCUIT BOARD NA06401 : EXCEPT EUROPEAN MODELS NA06402 : EUROPEAN MODELS ONLY

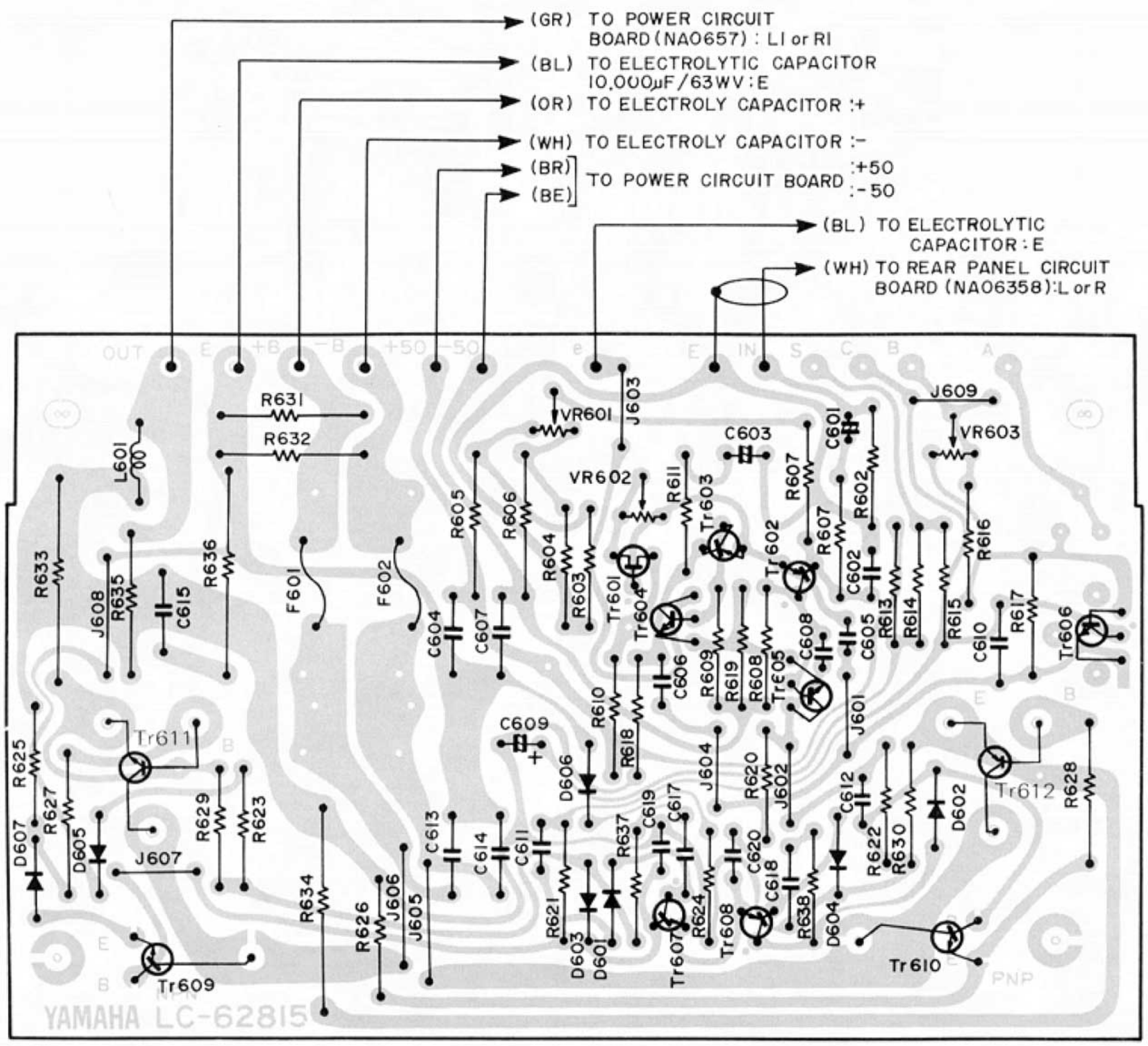

POWER CIRCUIT BOARD NA06357

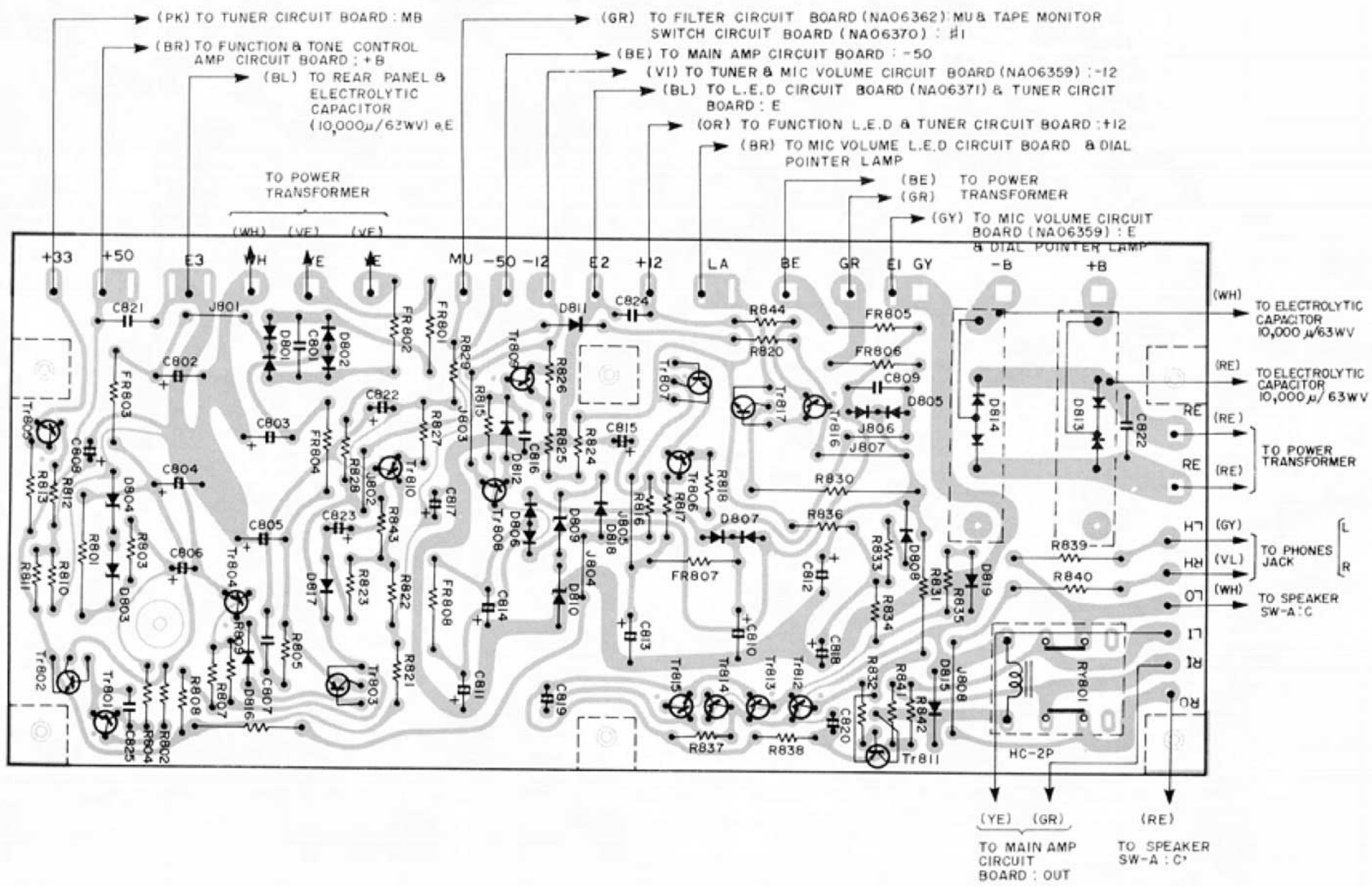

REAR PANEL CIRCUIT BOARD NA06358

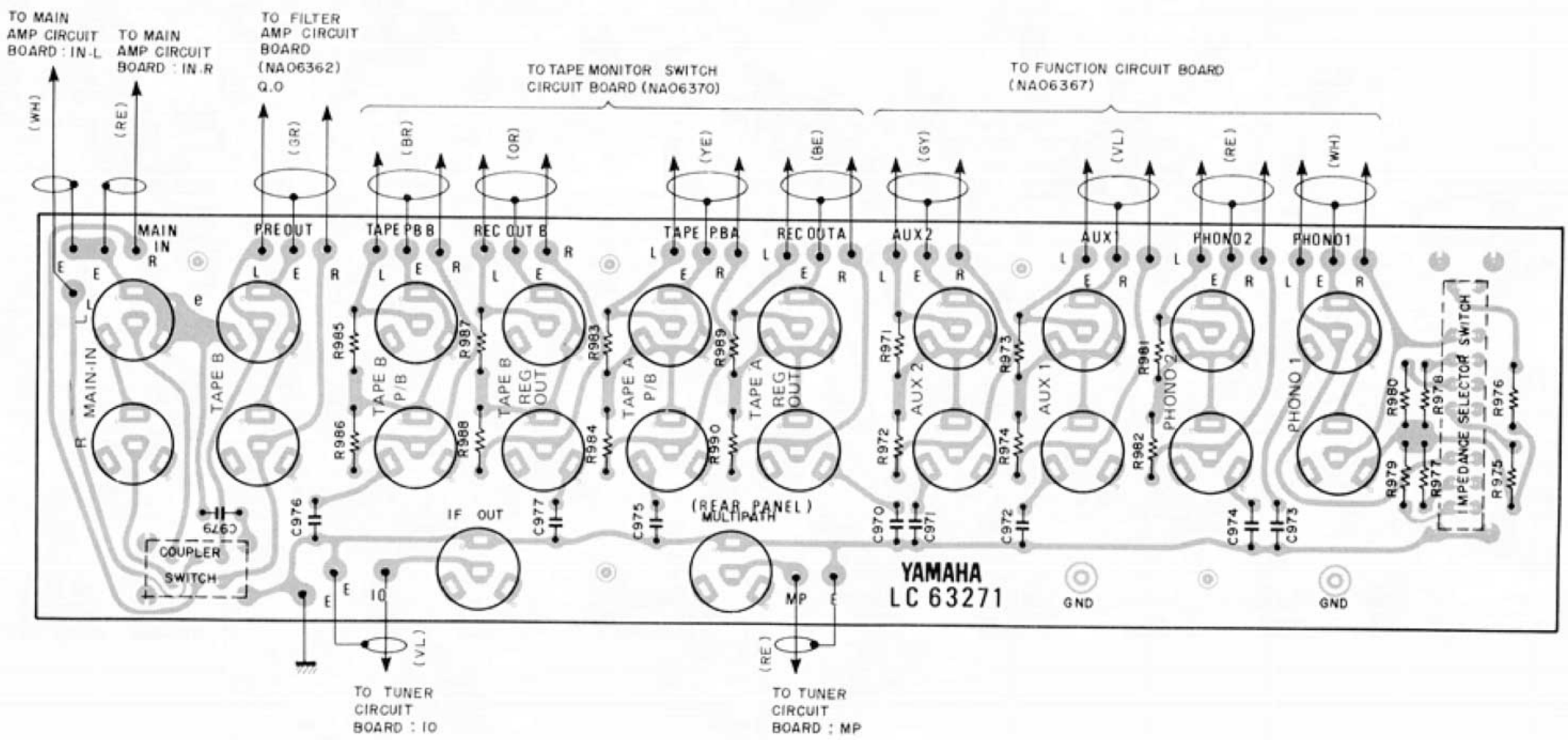

BLOCK DIAGRAM

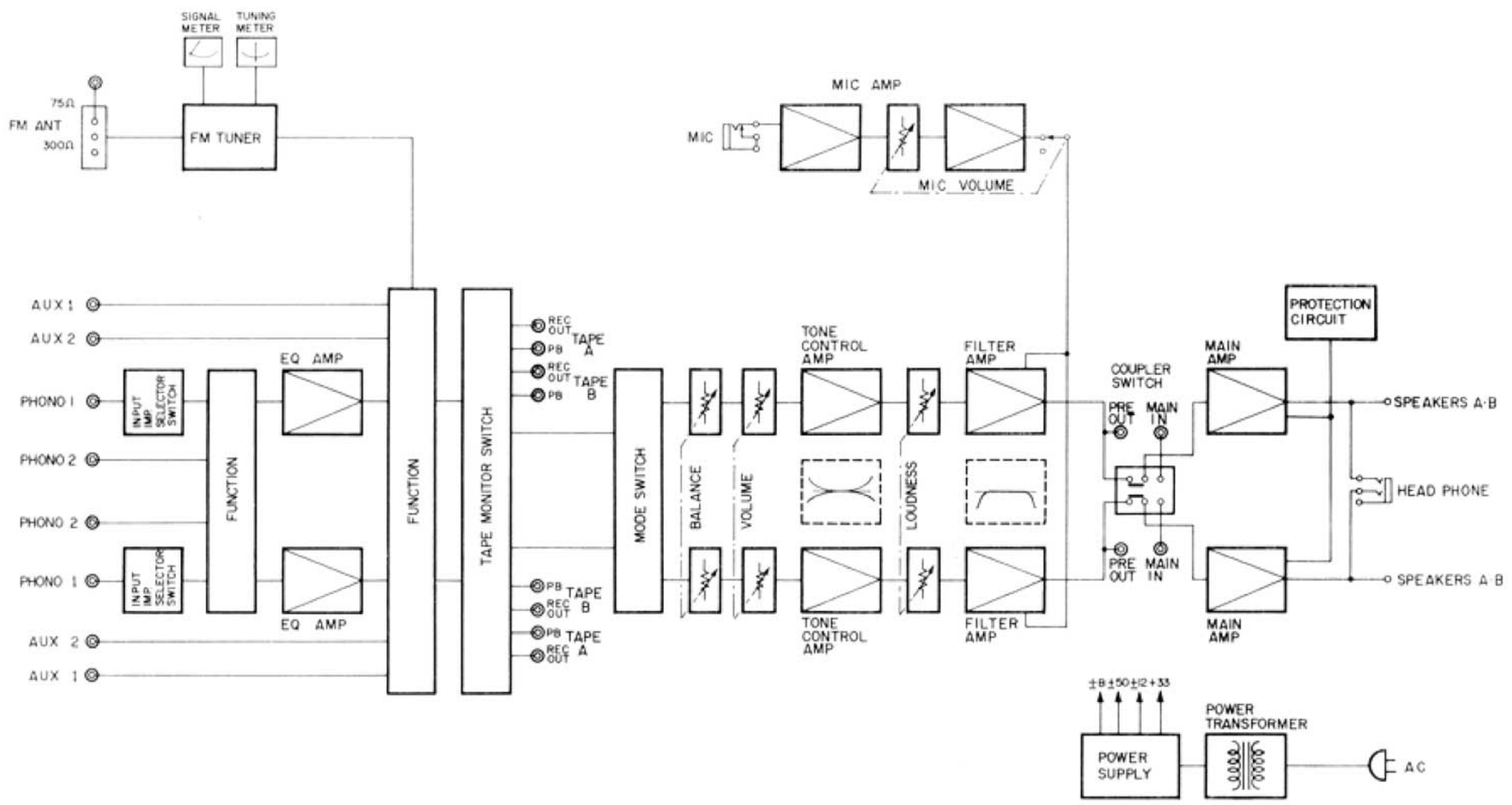

WIRE COLOR ABBREVIATIONS

BL ▶ Black	VI ▶ Violet
BR ▶ Brown	GY ▶ Gray
RE ▶ Red	WH ▶ White
OR ▶ Orange	GG ▶ Light Green
YE ▶ Yellow	SB ▶ Light Blue
GR ▶ Green	PK ▶ Pink
BE ▶ Blue	

SYMBOL	PARTS NAME
	FUSE RESISTOR
△	METAL OXIDE RESISTOR
□	CEMENT RESISTOR
NO MARK	CARBON RESISTOR
⊠	CEMENT MOLDED RESISTOR
▲	METAL OXIDE FILM RESISTOR
	METAL PLATE RESISTOR

SYMBOL	PARTS NAME	REMARKS
◎	MYLAR CAPACITOR	
NO MARK	CERAMIC CAPACITOR	
○	POLYSTYRENE CAPACITOR	
NO MARK	(BI-POLAR) ELECTROLYTIC CAPACITOR	
●	LOW-NOISE ELECTROLYTIC CAPACITOR	
⊗	TANTALUM CAPACITOR	

www.hifiengine.com

OVERALL SCHEMATIC DIAGRAM

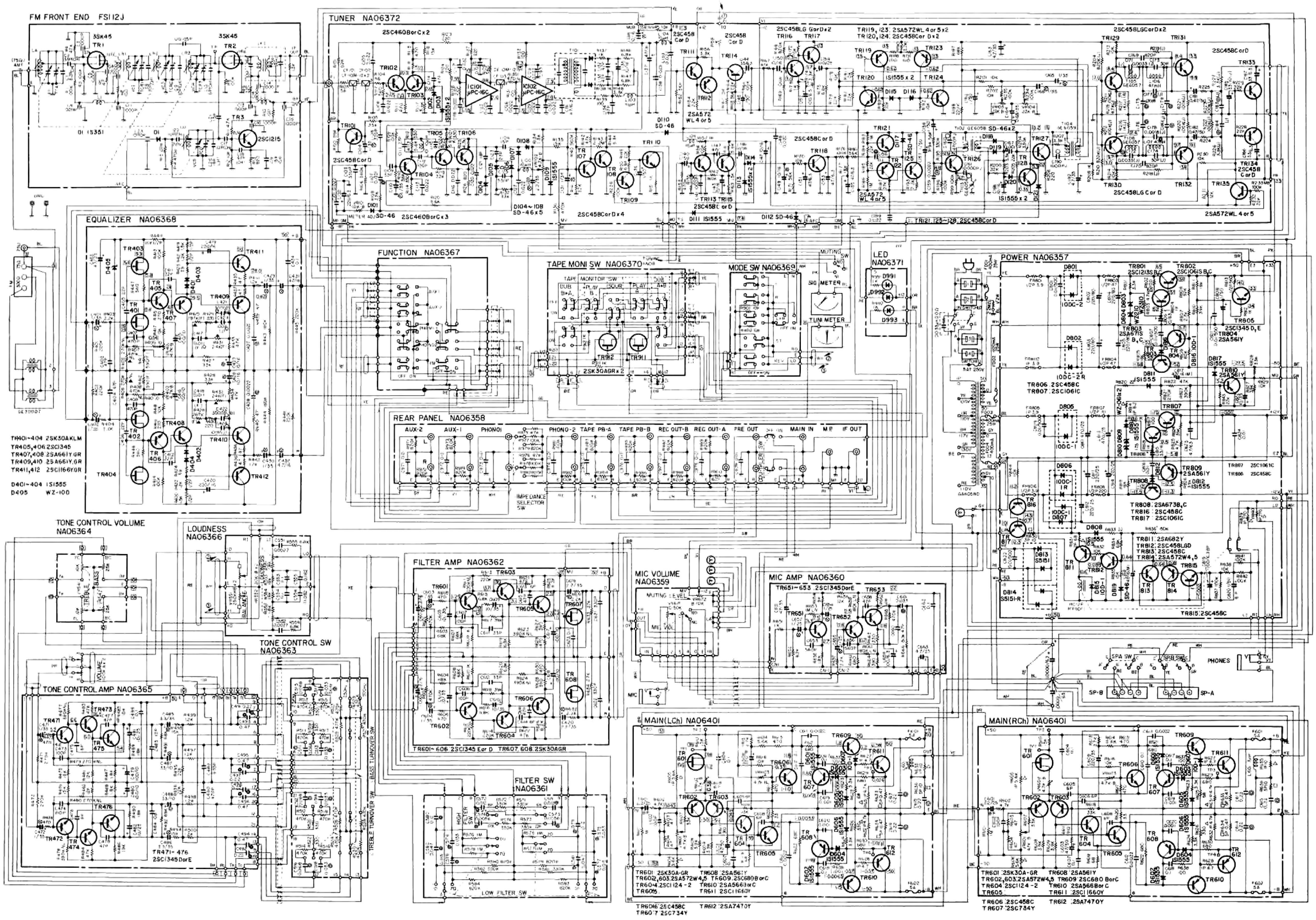

VOLTAGE TABLE

MUTING CIRCUIT

		OUT OF TUNE [98MHz]		TUNE [103.25MHz]	
		MUTING SW: OFF	MUTING SW: ON	MUTING SW: OFF	MUTING SW: ON
Tr104	C	10.5		11.0	
	B	1.16		0.82	
	E	0.5		0.15	
Tr105	C	1.7		1.3	
	B	0.68		0.68	
	E	0		0	
Tr106	C	4.8		4.2	
	B	1.7		1.3	
	E	1.0		1.05	
Tr107	C	0.7	0.69	0.021	
	B			0.63	
	E	0	0	0	
Tr108	C	0.056	0.048	11.0	9.0
	B	0.7	0.69	0.021	0.021
	E	0	0	0	0
Tr114	C	−0.52	−0.5	0.056	0.056
	B	0.1	−1.65	0.69	0.7
	E	−0.5	−0.49	0.05	0.055
Tr121	C	−0.13	−0.12	0.6	0.6
	B	−0.12	−0.12	0.3	0.3
	E	0	0	0	0
Tr122	C	−10.5	−10.5	−11.3	−11.3
	B	−0.58	−0.58	−0.2	−0.2
	E	0	0	0	0
Tr125	C	−0.13	−0.12	0.6	0.6
	B	−10.5	−10.5	−11.3	−11.3
	E	−11.0	−11.0	−11.3	−11.3
Tr133	C	0	0	0	0
	B	−1.7	0.67	−1.7	−1.7
	E	0	0	0	0
Tr134	C	0	0	0	0
	B	−1.7	0.67	−1.7	−1.7
	E	0	0	0	0
Tr135	C	−1.7	8.5	−1.7	−1.7
	B	9.5	8.0	9.4	9.8
	E	9.8	8.5	9.8	9.8

FUNCTION: FM MONO
MUTING LEVEL: "0"

FM AGC

		OUT OF TUNE [98MHz]	TUNE [103.25MHz]
Tr101	C	4.2	4.3
	B	0	0.24
	E	0	0

BUFFER AMP

		AT OUT OF TUNE [98MHz]	AT TONE [103.25MHz]
Tr111	C	11.3	11.3
	B	−0.48	0
	E	−1.1	−0.58
Tr112	C	−11.3	−11.3
	B	−1.1	−0.58
	E	−0.5	0.015

AUTO TOUCH AFC OFF

		AT OUT OF TUNE [98MHz]		AT TUNE [103.25MHz]	
		☆UN-TOUCH-ED	✱TOUCH-ED	☆UN-TOUCH-ED	✱TOUCH-ED
Tr109	C	0.056	0.008	10	0.076
	B	0	0.57	0	0.64
	E	0	0	0	0
Tr110	C	10.0	10.0	9.5	9.7
	B	0.056	0.02	10	2.4
	E	0	0	9.2	1.7
Tr118	C	−0.42	0	0.063	0.006
	B	0	0.64	0	0.62
	E	0	0		0

☆UNTOUCHED; When tuning knob is untouched,
✱TOUCHED ; When tuning knob is touched,

Circuit Diagram Lead Cord Color Code Chart

Code	Color	Code	Color
BL	Black	VI	Violet
BR	Brown	GY	Grey
RE	Red	WH	White
OR	Orange	GG	Light Green
YE	Yellow	SB	Light Blue
GR	Green	PK	Pink
BE	Blue		

www.hifiengine.com

PARTIAL CHANGES MADE ACCORDING TO DESTINATION

POWER CIRCUIT : PRIMARY SIDE

▼ U.S.& CANADIAN MODELS

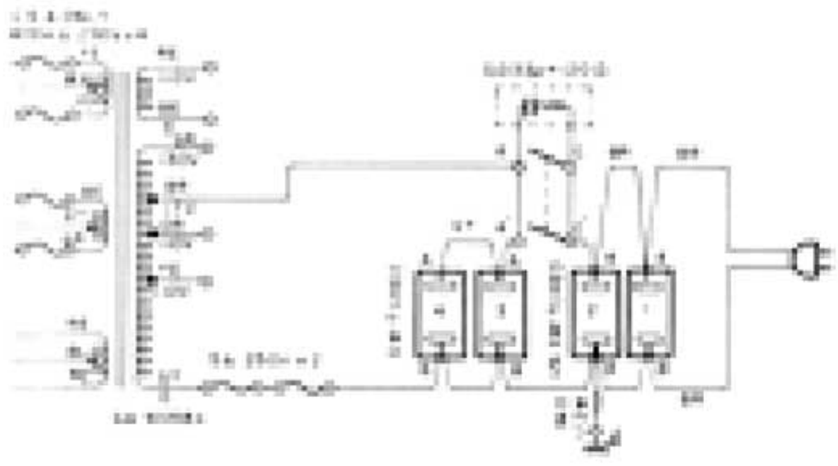

▼ SOUTH AFRICAN MODEL

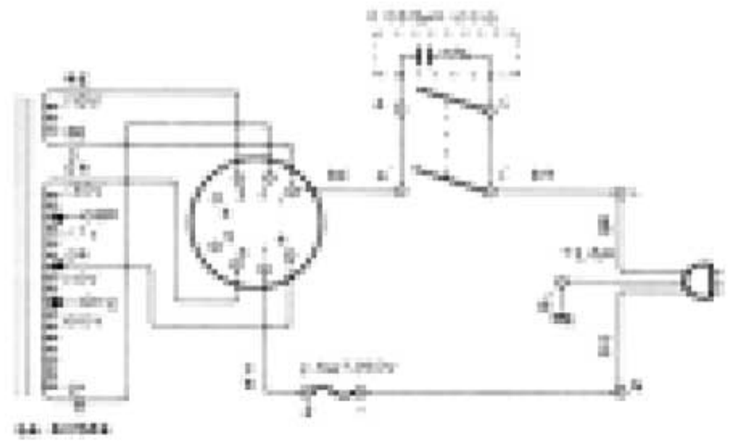

▼ GENERAL MODEL

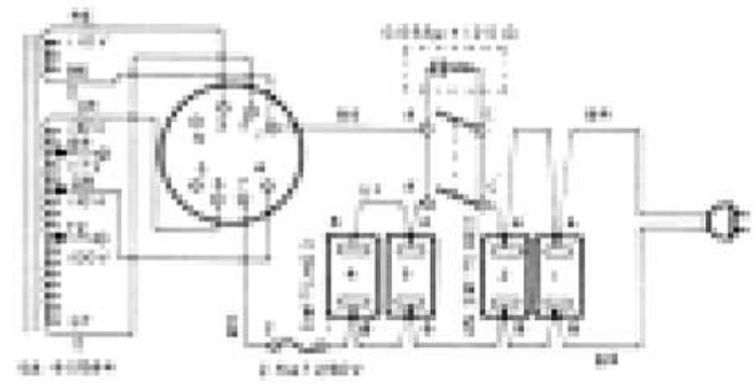

▼ EUROPEAN MODEL

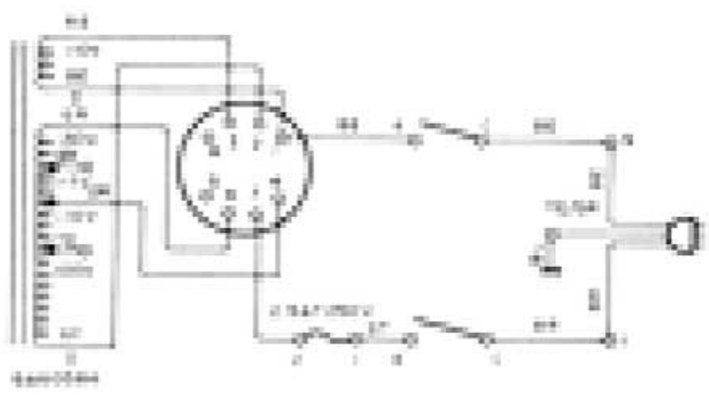

▼ AUSTRALIAN MODEL

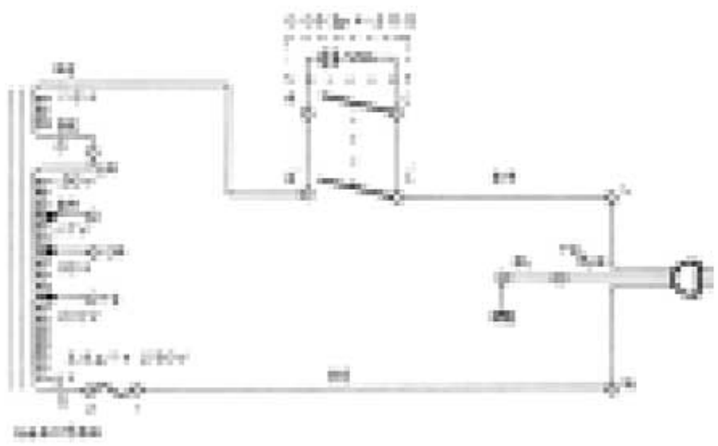

ANTENNA

▼ U.S.& CANADIAN MODELS ONLY

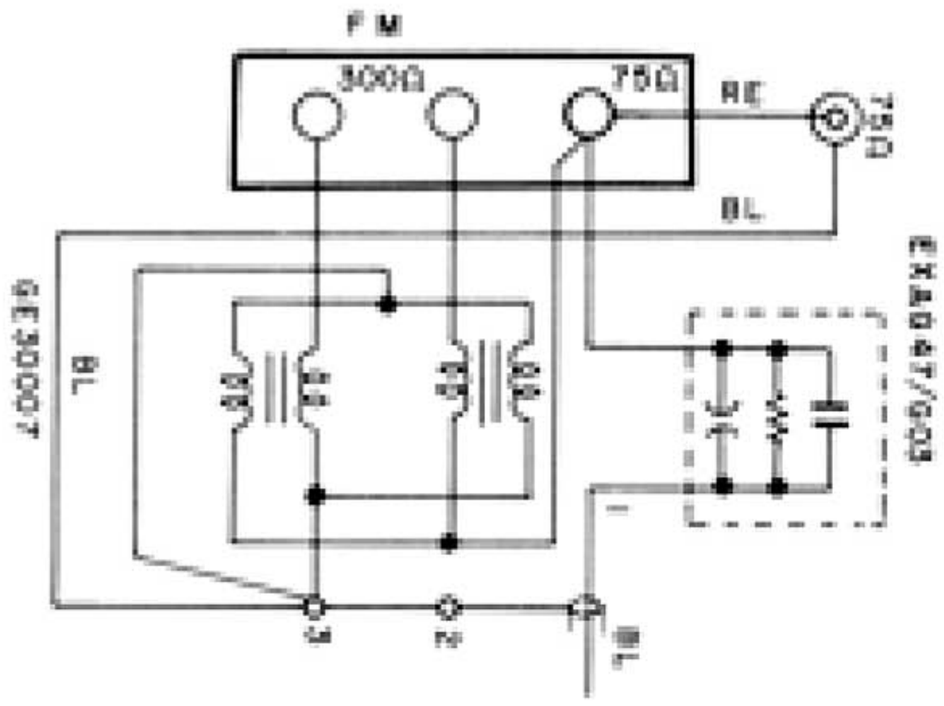

▼ EXCEPT U.S.& CANADIAN MODELS

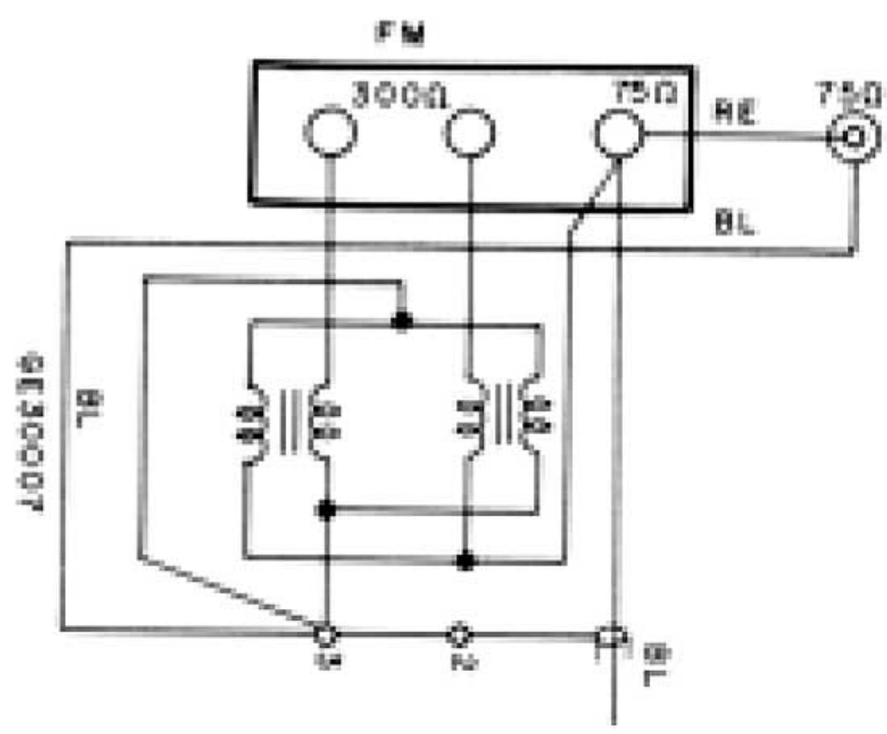

TUNER CIRCUIT BOARD

DESTINATION	SOUTH AFRICAN MODEL	EUROPEAN, AUSTRALIAN & GENERAL MODELS	U.S. & CANADIAN MODELS
NA. NO. / PARTS NO.	NA06461	NA06463	NA06462
C 175 C 176	MYLAR CAPACITOR 0.0027μF (±5%)	SAME AS SOUTH AFRICAN MODEL	MYLAR CAPACITOR 0.0047μF (±5%)
C 179 C 180	MYLAR CAPACITOR 0.0027μF (±5%)	SAME AS SOUTH AFRICAN MODEL	MYLAR CAPACITOR 0.0033μF (±5%)
C 183 C 184	MYLAR CAPACITOR 0.0022μF (±5%)	SAME AS SOUTH AFRICAN MODEL	MYLAR CAPACITOR 0.018μF (±5%)
R 218 R 219	CARBON RESISTOR 6.8kΩ ¼W (±5%)	SAME AS SOUTH AFRICAN MODEL	CARBON RESISTOR 5.6kΩ ¼W (±5%)
R 224 R 225	CARBON RESISTOR 1kΩ ¼W (±5%)	SAME AS SOUTH AFRICAN MODEL	CARBON RESISTOR 1.2kΩ ¼W (±5%)
T 101	GE 6025	GE 6019	GE 6019
DE EMPHASIS	50μsec	50μsec	75μsec

www.hifiengine.com

VOLTAGE TABLE

MUTING CIRCUIT

		OUT OF TUNE [98MHz]		TUNE [103.25MHz]	
		MUTING SW: OFF	MUTING SW: ON	MUTING SW: OFF	MUTING SW: ON
Tr104	C	10.5		11.0	
	B	1.16		0.82	
	E	0.5		0.15	
Tr105	C	1.7		1.3	
	B	0.68		0.68	
	E	0		0	
Tr106	C	4.8		4.2	
	B	1.7		1.3	
	E	1.0		1.05	
Tr107	C	0.7	0.69	0.021	
	B			0.63	
	E	0	0	0	
Tr108	C	0.056	0.048	11.0	9.0
	B	0.7	0.69	0.021	0.021
	E	0	0	0	0
Tr114	C	−0.52	−0.5	0.056	0.056
	B	0.1	−1.65	0.69	0.7
	E	−0.5	−0.49	0.05	0.055
Tr121	C	−0.13	−0.12	0.6	0.6
	B	−0.12	−0.12	0.3	0.3
	E	0	0	0	0
Tr122	C	−10.5	−10.5	−11.3	−11.3
	B	−0.58	−0.58	−0.2	−0.2
	E	0	0	0	0
Tr125	C	−0.13	−0.12	0.6	0.6
	B	−10.5	−10.5	−11.3	−11.3
	E	−11.0	−11.0	−11.3	−11.3
Tr133	C	0	0	0	0
	B	−1.7	0.67	−1.7	−1.7
	E	0	0	0	0
Tr134	C	0	0	0	0
	B	−1.7	0.67	−1.7	−1.7
	E	0	0	0	0
Tr135	C	−1.7	8.5	−1.7	−1.7
	B	9.5	8.0	9.4	9.8
	E	9.8	8.5	9.8	9.8

FUNCTION: FM MONO
MUTING LEVEL: "0"

FM AGC

		OUT OF TUNE [98MHz]	TUNE [103.25MHz]
Tr101	C	4.2	4.3
	B	0	0.24
	E	0	0

BUFFER AMP

		AT OUT OF TUNE [98MHz]	AT TONE [103.25MHz]
Tr111	C	11.3	11.3
	B	−0.48	0
	E	−1.1	−0.58
Tr112	C	−11.3	−11.3
	B	−1.1	−0.58
	E	−0.5	0.015

AUTO TOUCH AFC OFF

		AT OUT OF TUNE [98MHz]		AT TUNE [103.25MHz]	
		☆UN-TOUCH-ED	★TOUCH-ED	☆UN-TOUCH-ED	★TOUCH-ED
Tr109	C	0.056	0.008	10	0.076
	B	0	0.57	0	0.64
	E	0	0	0	0
Tr110	C	10.0	10.0	9.5	9.7
	B	0.056	0.02	10	2.4
	E	0	0	9.2	1.7
Tr118	C	−0.42	0	0.063	0.006
	B	0	0.64	0	0.62
	E	0	0		0

☆UNTOUCHED: When tuning knob is untouched.
★TOUCHED : When tuning knob is touched.

Circuit Diagram Lead Cord Color Code Chart

Code	Color	Code	Color
BL	Black	VI	Violet
BR	Brown	GY	Grey
RE	Red	WH	White
OR	Orange	GG	Light Green
YE	Yellow	SB	Light Blue
GR	Green	PK	Pink
BE	Blue		

www.hifiengine.com

PARTIAL CHANGES MADE ACCORDING TO DESTINATION

POWER CIRCUIT : PRIMARY SIDE

▼ U.S.& CANADIAN MODELS

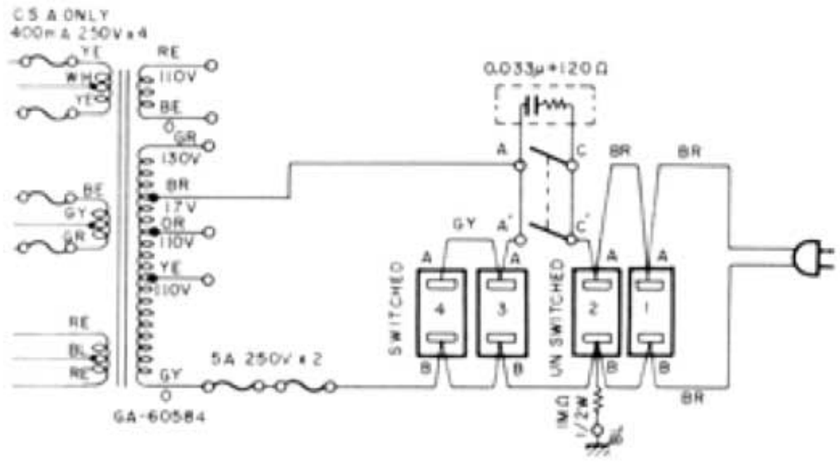

▼ SOUTH AFRICAN MODEL

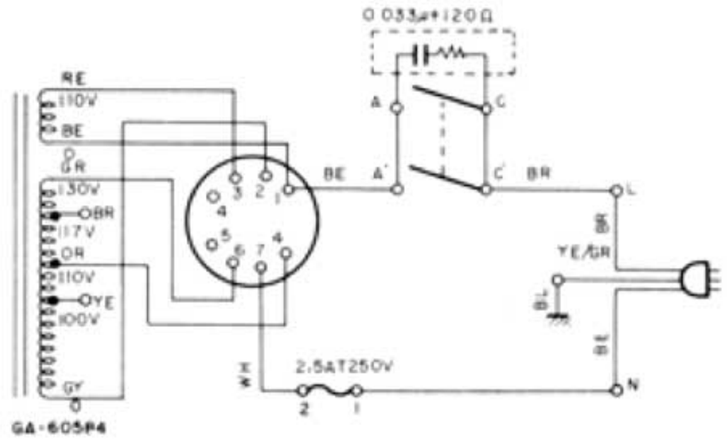

▼ GENERAL MODEL

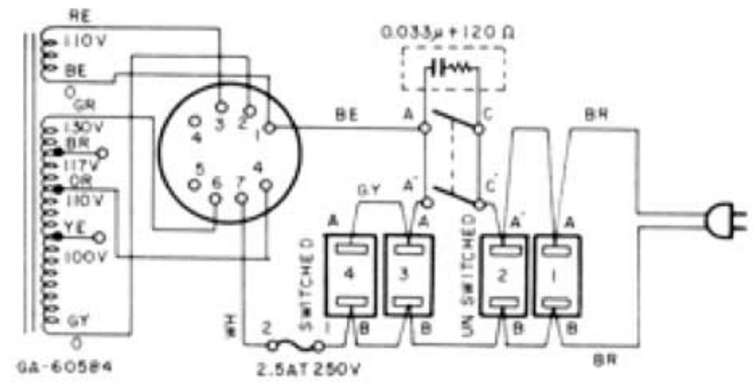

▼ EUROPEAN MODEL

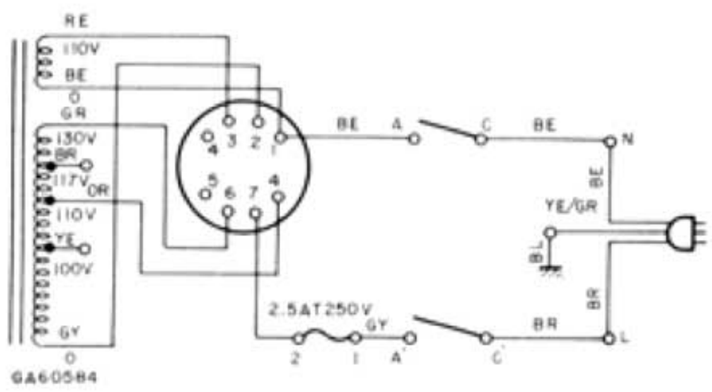

▼ AUSTRALIAN MODEL

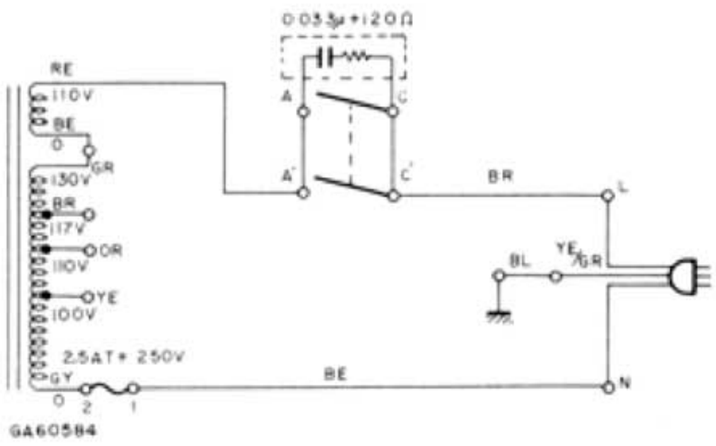

ANTENNA

▼ U.S.& CANADIAN MODELS ONLY

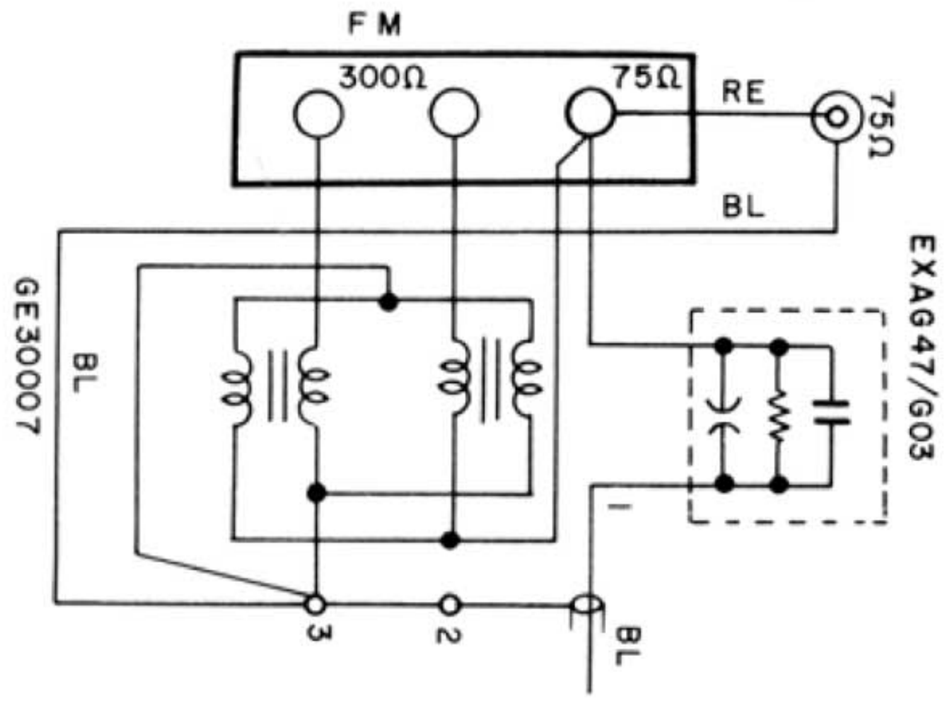

▼ EXCEPT U.S.& CANADIAN MODELS

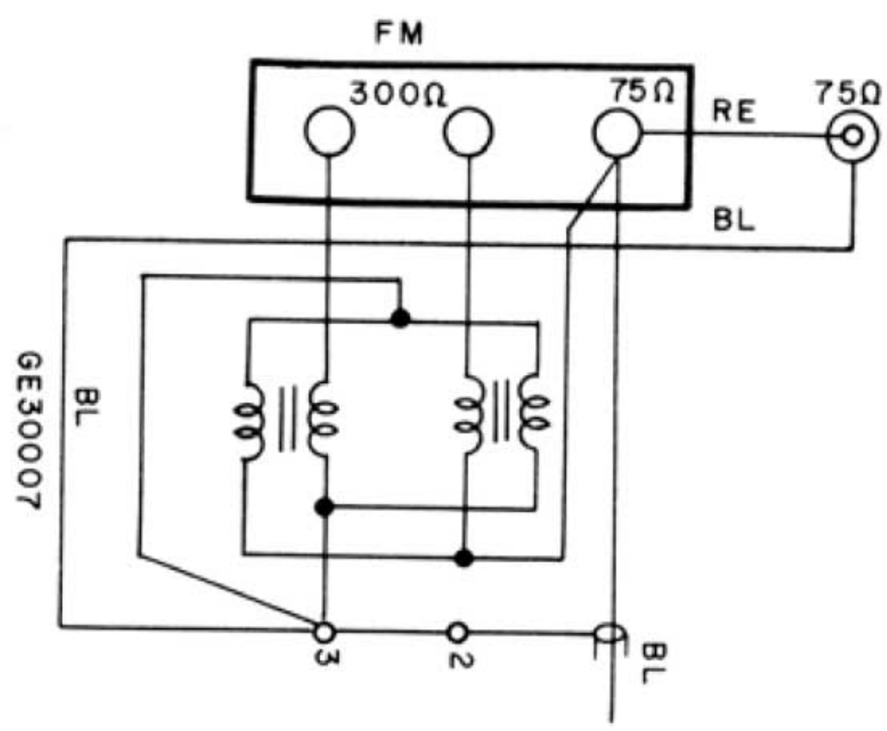

TUNER CIRCUIT BOARD

DESTINATION	SOUTH AFRICAN MODEL	EUROPEAN, AUSTRALIAN & GENERAL MODELS	U.S. & CANADIAN MODELS
NA. NO. / PARTS NO.	NA06461	NA06463	NA06462
C 175 C 176	MYLAR CAPACITOR 0.0027μF (±5%)	SAME AS SOUTH AFRICAN MODEL	MYLAR CAPACITOR 0.0047μF (±5%)
C 179 C 180	MYLAR CAPACITOR 0.0027μF (±5%)	SAME AS SOUTH AFRICAN MODEL	MYLAR CAPACITOR 0.0033μF (±5%)
C 183 C 184	MYLAR CAPACITOR 0.0022μF (±5%)	SAME AS SOUTH AFRICAN MODEL	MYLAR CAPACITOR 0.018μF (±5%)
R 218 R 219	CARBON RESISTOR 6.8kΩ ¼W (±5%)	SAME AS SOUTH AFRICAN MODEL	CARBON RESISTOR 5.6kΩ ¼W (±5%)
R 224 R 225	CARBON RESISTOR 1kΩ ¼W (±5%)	SAME AS SOUTH AFRICAN MODEL	CARBON RESISTOR 1.2kΩ ¼W (±5%)
T 101	GE 6025	GE 6019	GE 6019
DE-EMPHASIS	50μsec	50μsec	75μsec

www.hifiengine.com

PARTS LIST

FRONT VIEW

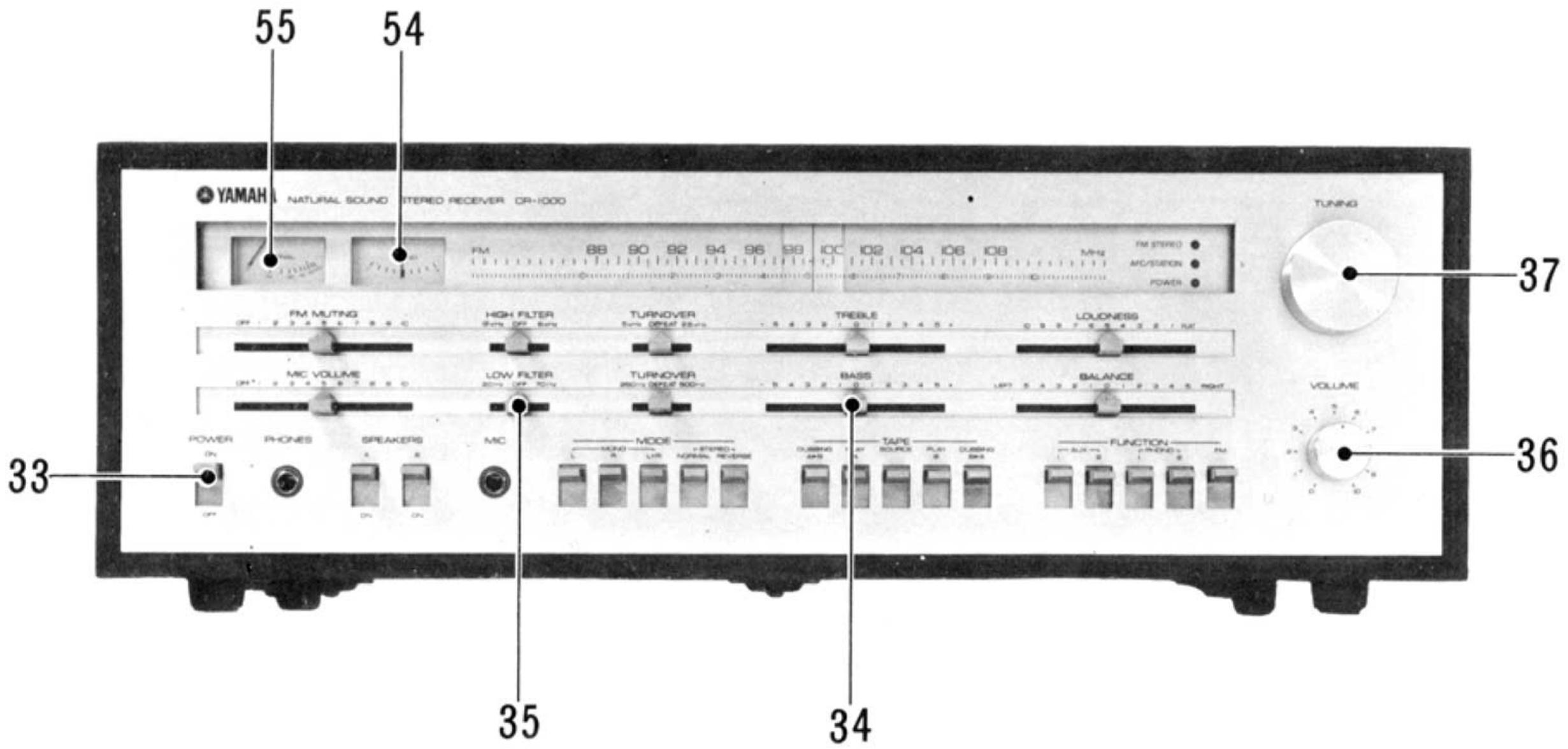

BACK VIEW

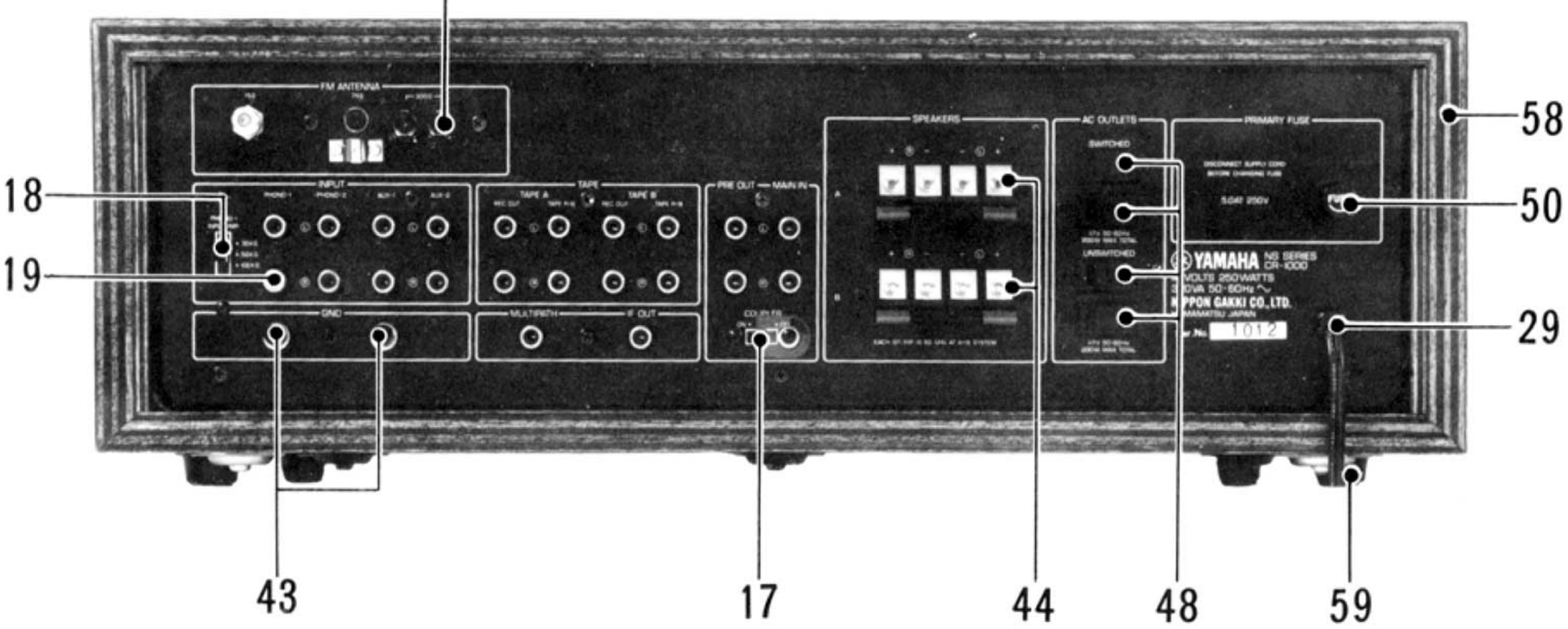

www.hifiengine.com

INTERNAL VIEW

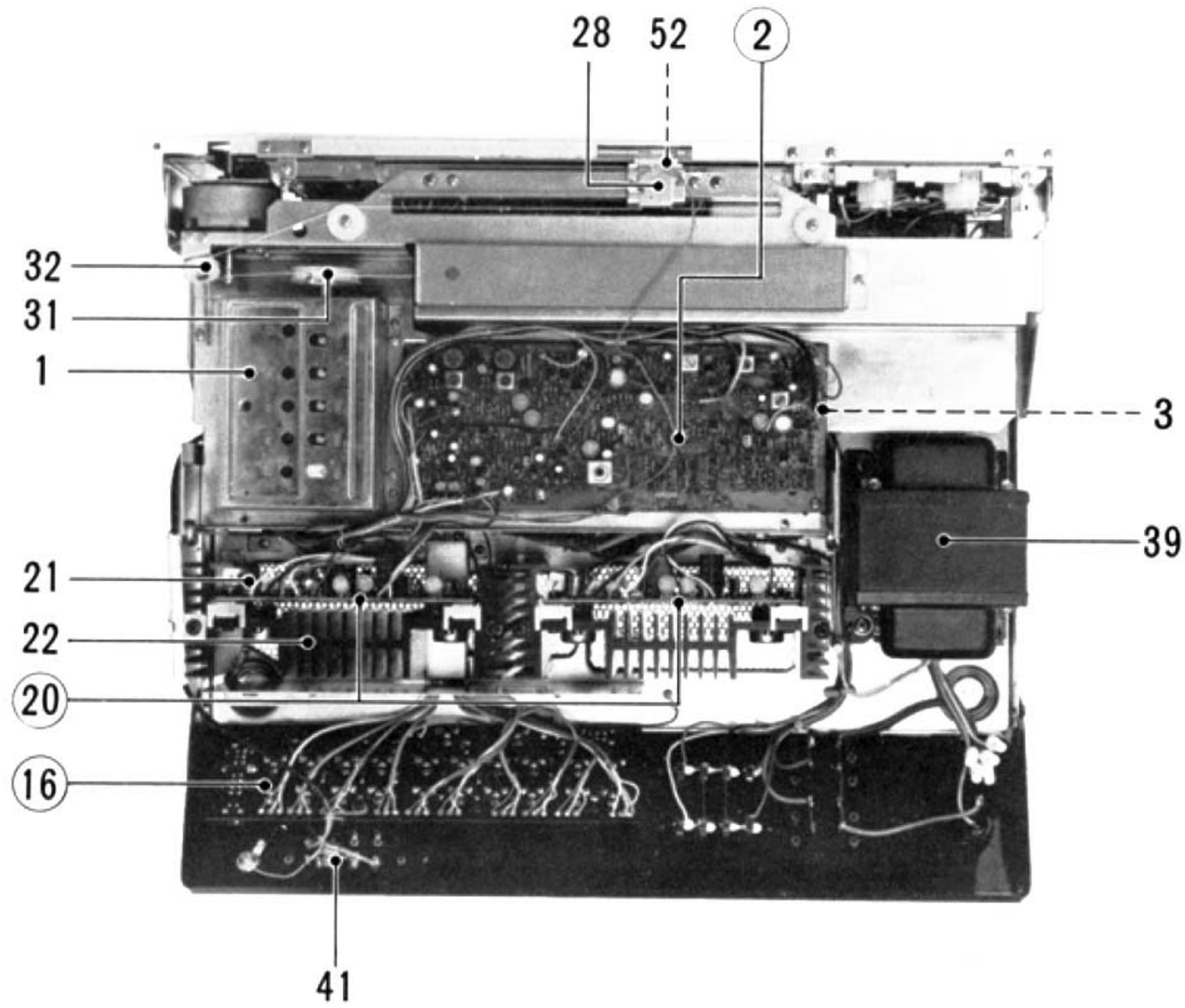

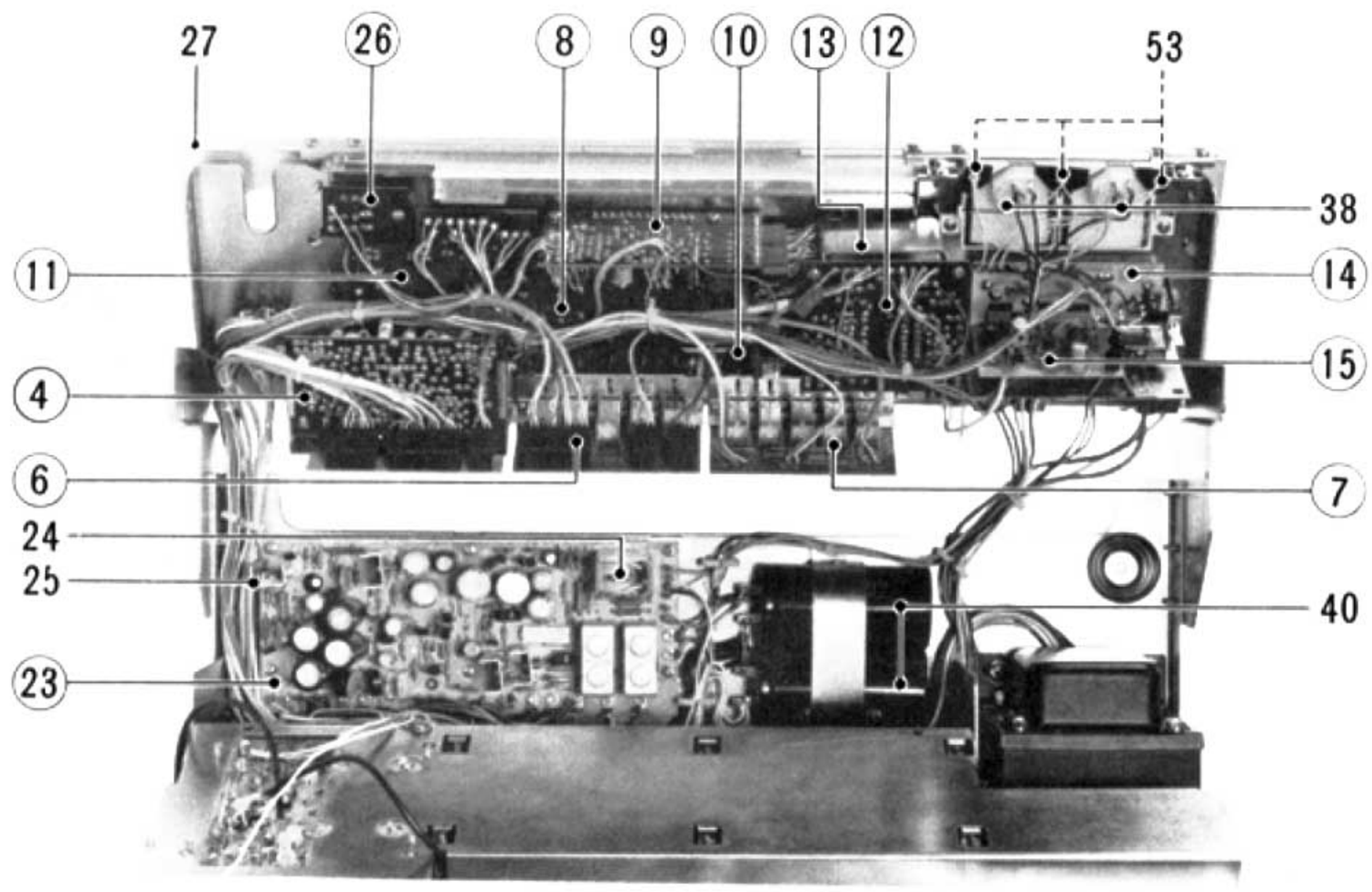

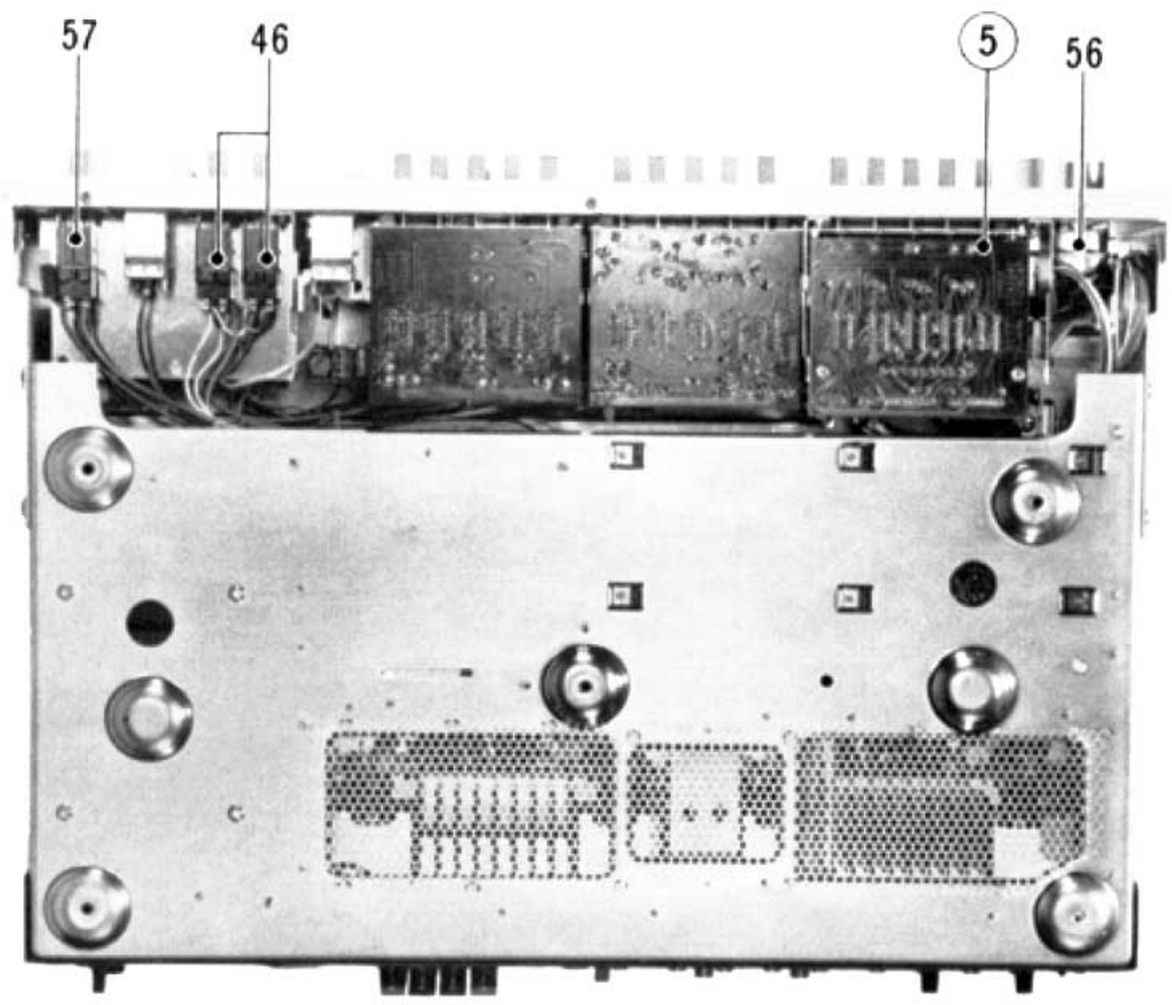

Ref. No.	Part No.	Description			Remarks	Common Models	
1	PA00016	FM Pack	FS112J	F M パ ッ ク	Domostic model		
	PA00017	〃	FS112U	〃	U.S.,Canadian,Australian & European models		
	PA00018	〃	FS112S	〃	South African model		
②	NA06372	FM IF circuit board	63012	F M I F シ ー ト	South African model	CR1000 CR800	
	NA06405	〃	〃	〃	U.S. & Canadian models	〃	
	NA06406	〃	〃	〃	General, Australian & European models	〃	
	FF04310	Polystyrene capacitor (X type)	1000PF	X型スチロールコンデンサ			
	FF04347	〃	4700PF	〃			
	FF04410	〃	10000PF	〃			
	FP13710	Tantalum capacitor	10μF 16WV	タンタル固体コンデンサ			
	FP15568	〃	0.68μF 35WV	〃			
	FP15610	〃	1μF 〃	〃			
	FP15622	〃	2.2μF 〃	〃			
	FM22633	Bipolar electrolytic capacitor	3.3μF 25WV	バイポーラコンデンサ			
	HT41004	Variable resistor (SV10KR)	B4.7KΩ	ソリッドVR			
	HT41007	〃 (〃)	B10KΩ	〃			
	HY00016	〃 (TM-10K)	B22KΩ	メタルグレーズVR			
	GE30001	RF inductor	10μH	RFインダクター			
	GE10005	FM IFT		F M I F T	GE6019		
	GE10006	〃		〃	GE6025		
	GE20008	MPX coil		M P X コ ー ル	GE6057		
	GE20009	〃		〃	GE6058		
	GE20010	〃		〃	GE6059		
	GE20011	〃	47mH	〃	GE6062		
	GG00002	Ceramic filter	CF-10M-12	セラミックフィルター			
	iG00003	Integrated circuit	μPC-16C	I C			
	iF00004	Diode	ISI555	ダイオード			
	iF00002	〃	SD-46	〃			
	iA05720	Transistor	2SA572(WL-4.5)	トランジスタ			
	iC04583	〃	2SC458(C or D)	〃			
	iC04585	〃	2SC458LG(C or D)	〃			
	iC04608	〃	2SC460(B or C)	〃			
3	LB10020	Pin jack	SQ3056	基板型ピンジャック			

www.hifiengine.com

Ref. No.	Part No.	Description		Remarks	Common Models	
④	NA06368	Equalizer circuit board #63372	イコライザーシート			
	HL40615	Metal oxide film resistor 1.5KΩ ½W	酸化金属抵抗			
	HZ00018	Metalized film resistor (±1%) 590Ω	金属被膜抵抗			
	HZ00019	〃 (〃) 24KΩ	〃			
	HZ00020	〃 (〃) 287KΩ	〃			
	FP13647	Tantalum capacitor 4.7μF 16WV	ディップ型タンタルコンデンサ			
	FP15610	〃 1μF 35WV	〃			
	FP13710	10μF 16WV	〃			
	FD15210	Polystyrene capacitor 100PF±5%	スチロールコンデンサ			
	FD19331	〃 3000PF±2%	〃			
	FD18411	〃 0.011μF±1%	〃			
	iF00004	Diode ISI555	ダイオード			
	iF00027	Zener diode WZ-100	ツェナーダイオード			
	iA06613	Transistor 2SA661 (GR or Y)	トランジスタ			
	iC11663	〃 2SC1166 (GR or Y)	〃			
	iC13455	〃 2SC1345 (E or F)	〃			
	iE00004	FET (field effect transistor) 2SK30A (K,L or M)	電界効果トランジスタ			
	LB30013	Connector socket 3P	3Pコネクターソケット			
	LB60028	〃 6P	6Pコネクターソケット			
	HT41004	Variable resistor (SV10KR) B4.7KΩ	ソリッドVR			
⑤	NA06367	Function switch circuit board #63360	ファンクションスイッチシート			
	KA70042	Lever switch (5 interlocking) SPZ-5202(S)	5連ピアノスイッチ	Function		
	LB60027	Connector plug 6P No.2183-6A	コネクタープラグ			
	LB30012	〃 3P No.2183-3A	〃			
	LB60030	CIS connector socket 13P	CISコネクターソケット13P			
	LB60025	〃 9P	〃 9P			
	LB40008	〃 4P	〃 4P			
	LB10016	CIS keying pin	CISキーイングピン			
⑥	NA06370	Tape monitor switch circuit board #63390	テープモニタースイッチシート			

Ref. No.	Part No.	Description		Remarks	Common Models	
	KA70044	Lever switch (5 interlocking)	5連ピアノスイッチ	TAPE		
	LB40008	CIS connector 4P	CISコネクター4P			
	LB50007	〃 5P	〃 5P			
	LB60030	〃 13p	〃 13P			
	LB10016	CIS keying pin	CISキーイングピン			
⑦	NA06369	Mode siwtch circuit board #63380	モードスイッチシート			
	KA70042	Lever switch (5 interlocking)	5連ピアノスイッチ	MODE		
⑧	NA06364	Tone volume circuit board #63330	トーンボリウムシート			
	HQ20012	Slide variable resistor, with click 60mm 10KΩ x 2	スライドボリウム11点クリック付	TREBLE		
	HQ20011	〃 25KΩ x 2	〃	BASS		
	LB60028	Connector socket 6P No.2145-6A	コネクターソケット			
⑨	NA06365	Tone amp. circuit board #63341	トーンアンプシート			
	FP52733	Tantalum capacitor 33μF 10WV	タンタル固体コンデンサ			
	FP15610	〃 1μF 35WV	〃			
	FP15633	〃 3.3μF 35WV	〃			
	iC13454	Transistor 2SC1345(D or E)	トランジスタ			
	LB60027	Connector plug 6P No.2183-6A	コネクタープラグ			
	LB40011	CIS connector socket 4P	CISコネクターソケット4P			
	LB60036	〃 20P	〃 20P			
	LB10016	CIS keying pin	CISキーイングピン			
⑩	NA06363	Tone control switch circuit board #63321	トーンスイッチシート			
	KA20014	Lever switch SLA-34301	レバースイッチ	TURN OVER DEFEAT		
	LB60037	CIS connector housing 20P	CISコネクターハウジング			
	LB40009	〃 4P	〃			
	LB10019	CIS connector pin	CISコネクターピン			
⑪	NA06366	Loudness circuit board #63350	ラウドネスシート			

www.hifiengine.com

Ref. No.	Part No.	Description		Remarks	Common Models	
	HQ20013	Slide variable resistor B20KΩ x 2	スライドVR	LOUDNESS		
	HQ20014	〃 HB250KΩ x 2	〃	BALANCE		
⑫	NA06362	Filter amp circuit board #63310	フィルターアンプシート			
	FP13622	Tantalum capacitor 2.2μF 16WV	タンタルコンデンサ			
	FP15610	〃 1μF 35WV	〃			
	FP15622	〃 2.2μF 35WV	〃			
	iC13454	Transistor 2SC1345 (E or D)	トランジスタ			
	iE00002	FET (field effect transisfor) 2SK30A (GR)	電界効果トランジスタ			
	LB60027	Connector plug 6P No.2183-6A	コネクタープラグ			
	LB30012	〃 3P No.2183-3A	〃			
⑬	NA06361	Filter switch circuit board #63301	フィルタースイッチシート			
	KA20016	Lever switch SLA-32301	レバースイッチ	TREBLE		
	KA20014	〃 SLA-34301	〃	BASS		
	LB30013	Connector socket 3P No.2145-3A	コネクターソケット3P			
	LB60028	〃 6P No.2145-6A	〃 6P			
⑭	NA06359	Mic volume circuit board #63281	マイクVRシート			
	HQ20015	Slide variable resistor 60mm C-50KΩ	スライドVR	INPUT GAIN		
	HQ20016	〃 〃 B10KΩ	〃	OUTPUT GAIN		
	KA60011	Micro switch AM6220-44	マイクロスイッチ	MIC SW.		
	AA07533	Micro switch holder	マイクロスイッチホルダー			
	AA07534	Micro switch lever	マイクロスイッチレバー			
	AA07535	〃	〃			
	LB30012	Connector plug 3P No.2183-3A	コネクタープラグ3P			
	LB60027	〃 6P No.2183-6A	〃 6P			
⑮	NA06360	Mic amp circuit board #63291	マイクアンプシート			
	FP14610	Tantalum capacitor 1μF 25WV	タンタルコンデンサ			
	iC13454	Transistor 2SC1345 (C or D)	トランジスタ			

www.hifiengine.com

Ref. No.	Part No.	Description			Remarks	Common Models	
	LB60028	Connector socket	6P No.2145-6A	コネクターソケット 6P			
	LB30013	〃	3P No.2145-3A	〃 3P			
⑯	NA06358	Rear panel circuit board	#63271	リアパネルシート			
17	KA40021	Slide switch	SL222B4	スライドスイッチ	COUPLER		
18	KA40020	〃	SL243B4BM	〃	PHONO IMP		
19	LB10014	Pin jack	S-Q3061	ピンジャック			
⑳	NA06401	Main amp circuit board	#62815	メインシート	except European model		
	NA06402	〃	〃	〃	European model		
	HZ00021	Cement molded resistor (fireproof)	4.7Ω 1W	不燃性抵抗			
	HL31410	Metal oxide resistor	10Ω 1W	酸化金属抵抗			
	HL31647	〃	4.7KΩ	〃			
	HL31656	〃	5.6KΩ	〃			
	HM55247	Cement resistor	0.47Ω 5W	セメント抵抗			
	HM55410	〃	10Ω 5W	〃			
	FM22622	Bipolar electrolytic capacitor	2.2μF 25WV	バイポーラコンデンサ			
	FM11747	〃	47μF 50WV	〃			
	HT41015	Variable resistor (SR29R)	B4.7KΩ	可変抵抗器			
21	GD90005	Coil	3μH	空芯コイル			
	iA05612	Transistor	2SA561(Y)	トランジスタ			
	iA05662	〃	2SA566(B or C)	〃			
	iA05720	〃	2SA572(W-4.5)	〃			
	iC04583	〃	2SC458(C)	〃			
	iC06802	〃	2SC680(B or C)	〃			
	iC07342	〃	2SC734(Y)	〃			
	iC11242	〃	2SC1124(−2)	〃			
	iA07471	〃	2SA747 (O) or (Y)	〃			
	iC11161	〃	2SC1116 (O) or (Y)	〃			
	iE00002	FET (field effect transistor)	2SK30A GR	電界効果トランジスタ			
	iF00004	Diode	ISI555	ダイオード			
	iF00003	〃	10D-1	〃			

www.hifiengine.com

Ref. No.	Part No.	Description			Remarks	Common Models	
	LB30011	Transistor socket	S2-110B-00	トランジスタソケット			
	LB20057	Fuse holder pin		ヒューズホルダーピン			
	BB06308	Transistor pusher		トランジスタ押え			
22	BA06487	Heat sink		放熱板			
	KB00110	Fuse (UL listed SS-2)	5.0A 250V	ヒューズ	except European model		
	KB00059	Miniature fuse	5.0A 250V	〃	European model		
	HZ00057	Fuse resistor	68Ω 85mA	ヒューズ抵抗			
	HZ00060	〃	680Ω 25mA	〃			
㉓	NA06357	Power supply circuit board	#63263	電源シート			
	HL31527	Metal oxide resistor	270Ω 1W	酸化金属抵抗			
	HL31682	〃	8.2KΩ 〃	〃			
	HL32468	〃	68Ω 2W	〃			
	HL32633	〃	3.3KΩ 〃	〃			
	HL33410	〃	10Ω 3W	〃			
	HZ00030	Fuse resistor	3.9Ω 1W	ヒューズ抵抗			
	HZ00026	〃	10Ω ½W	〃			
	HZ00015	〃	47Ω 〃	〃			
	HZ00014	〃	220Ω 〃	〃			
	FM10810	Bipolar electrolytic capacitor	100μF 6.3WV	バイポーラコンデンサ			
	FM11610	〃	1μF 50WV	〃			
	iF00004	Diode	ISI555	ダイオード			
	iH00003	〃	10D-1	〃			
	iH00008	〃	10DC-1	〃			
	iH00009	〃	10DC-1R	〃			
	iH00005	〃	10DC-2	〃			
	iH00013	〃	10DC-2R	〃			
	iF00002	〃	SD-46	〃			
	iF00032	Zenner diode	WZ-061	ツェナーダイオード			
	iF00028	〃	WZ-210	〃			
	iF00022	〃	WZ-310	〃			
	iA05612	Transistor	2SA561(Y)	トランジスタ			
	iA05720	〃	2SA572(W-4.5)	〃			
	iA06739	〃	2SA673(B or C)	〃			
	iA06719	〃	2SA671(B or C)	〃			
	iA06820	〃	2SA682(Y)	〃			
	iC04583	〃	2SC458(C)	〃			

www.hifiengine.com

Ref. No.	Part No.	Description			Remarks	Common Models	
	iC04586	〃	2SC458LG(D)	〃			
	iC10613	Transistor	2SC1061(C)	トランジスタ			
	iC10618	〃	2SC1061(B or C)	〃			
	iC12139	〃	2SC1213(B or C)	〃			
	iC13454	〃	2SC1345(D or E)	〃			
24	KC00008	Rellay	HC-2P	リレー			
	iH00021	Diode	S5151	シリコンダイオード			
	iH00022	〃	S5151R	〃			
25	BA06161	Heat sink		放熱板			
㉖	NA06371	L.E.D. circuit board	#63400	L. E. D. シート			
	iF00029	Light emitting diode	TLR-102	発光ダイオード			
	CB06896	Indicator holder		インジケーターホルダー			
	CB06944	Plastic revet		プラスチックリベット			
27	NB06754	Front panel assembly		パネルユニット			
	NB06756	Dial scale panel unit		目盛板ユニット			
28	NB06757	Dial pointer unit		ダイアル指針ユニット			
29	CB06863	Cord stopper (small)		コードストッパー	General, U.S. & Canadian models		
30	CB00441	〃 (larger)		〃	South African, Australian & European models		
31	CB06942	Pulley for variable capacitor		バリコンプーリー			
32	CB06599	Pulley		滑車			
	CB06829	Meter frame		メーター枠		CR400	
33	CB06893	Knob (lever switch)		レバーツマミ			
34	CB06930	Knob (slide volume)		スライドVRツマミ			
35	CB06931	Knob (change lever)		切換レバーツマミ			
36	BA06446	Knob (volume)		ツマミ		CA-1000	
37	BA06486	Knob (tuning)		チューニングツマミ			
	BA06490	Dial scale panel		ダイアル目盛板			
	AA07038	Dial spring		ダイアルスプリング			
38	AA07363	Meter holder spring		メーター押えバネ			
39	GA60584	Power transformer		電源トランス			
40	FZ00014	Electrolytic capacitor	10000μF 63WV	電解コンデンサ			
41	GE30007	Balun transformer		バルーントランス			
42	LA00110	Antenna terminal	3P	アンテナ端子			
43	LA00107	Ground terminal		アース端子		CA1000	
44	LA00111	Push terminal (4PD)		4PD型プッシュターミナル			
45	LA00101	Terminal	3P	中継端子台3P			

Ref. No.	Part No.	Description		Remarks	Common Models	
46	LB30007	Phone jack JH5020K	ホーンジャック			
47	LB20016	F type receptacle F-61A	F型レセプタクル	except European model		
	LB20015	Connector socket for 75Ω coreaxial cable	75Ω同軸コネクターソケット	European model		
48	LB20030	AC socket	ACコンセント			
49	LB20025	Voltage selector	電圧切換器			
50	LB20048	Fuse holder	ヒューズホルダー	except European model		
	LB20047	"	"	Canadian model		
51	LB20059	" FEB031-1401	"	European model		
	CG06026	Dial panel	ダイアルパネル			
52	JB00009	Lead type lamp 12V60mA	リード式パイロットランプ			
53	JB00023	" "	"		CA1000	
54	Ji00019	Tuning meter	チューニングメーター			
55	Ji00020	Signal meter	シグナルメーター			
56	HS12038	Variable resistor A100KΩ x 2	可変抵抗器			
57	KA20010	Lever switch JL-04	電源スイッチ	except European model		
	KA20011	" JL-08	"	European model		
	KB00042	Fuse 250V 2.5A	ヒューズ	General, South African & Australian models		
	KB00110	" (SS-2) " 5A	"	U.S. & Canadian models		
	KB00087	Lead type fuse " 5A	"	"		
	KB00066	Miniature fuse " 400mAT	"	Canadian model		
	KB00069	Miniature fuse " 2.5AT	"	European model		
58	3200127005000	Outside case	外箱			
59	CB06889	Slip fitting	脚			
	NB06678	Service pad	サービスパッド			
	FZ00009	Complex part	複合部品	U.S. & Canadian models		

www.hifiengine.com

SINCE 1887 YAMAHA

NIPPON GAKKI CO., LTD. HAMAMATSU, JAPAN

ASM-19 17.5 —47065 CR-1000 H.S. Printed in Japan.

www.hifiengine.com